777-300ER

INTERNATIONAL LEASE FINANCE CORPORATION

WEIGHT AND BALANCE
CONTROL AND LOADING MANUAL

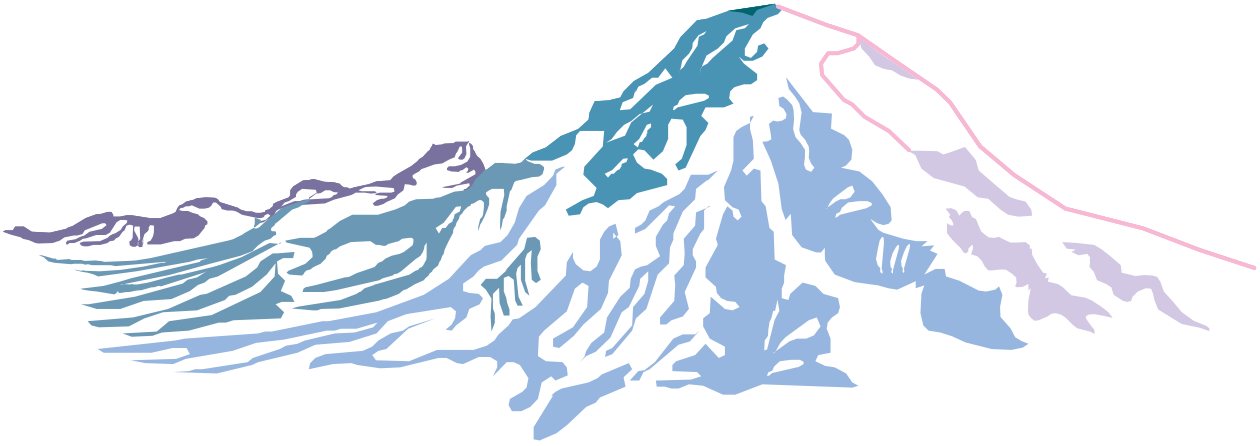

Export controlled by ECCN 9E991

EXPORT CONTROLLED - This technology or software is subject to the U.S. Export Administration Regulations (EAR), (15 C.F.R. Parts 730-774). No authorization from the U.S. Department of Commerce is required for export, re-export, in-country transfer, or access EXCEPT to country group E:1 or E:2 countries/persons per Supp.1 to Part 740 of the EAR.

Copyright © 2005-2025 Boeing. All rights reserved.

The Boeing Company claims copyright in each page of this document only to the extent that the page contains copyrightable subject matter. The Boeing Company also claims copyright in the document as a compilation and/or collective work.

BOEING PROPRIETARY

This document includes proprietary information owned by The Boeing Company and/or one or more third parties. Treatment of the document and the information it contains is governed by contract with Boeing.

Boeing Commercial Airplanes
Weight Engineering Organization
P.O. Box 3707 Seattle, Washington 98124

Boeing Document No. D043W530-ILF2

INTRODUCTION

The data presented in this manual are in compliance with Federal Aviation Regulations Part 25, Paragraphs 25.29; 25.471 (b); 25.1519 and 25.1583 (c); and are provided for the purpose of establishing the Model 777-300ER weight and balance requirements and allowables.

This manual presents all the weight and balance information necessary to ensure safe airplane operation. In addition, information is provided to allow the operator to efficiently plan loading procedures in such a manner that maximum payload capability is safely distributed for any type of operation.

The Weight and Balance Manual is organized following the guidelines of the Air Transport Association (ATA) Specification No. 100, “Specification for Manufacturers' Technical Data”. Accordingly, the weight and balance data is presented in two chapters.

CHAPTER 1 - CONTROL

Control contains all weight and balance data specifically related to the customer aircraft. The data presented in this chapter is modular, with groups of related information provided in discreet subject packages, each of which is uniquely identified by a three element Chapter-Section-Subject number (CHP-SEC-SUB). Major data groupings for the Chapter-Sections are as follows:

CHAPTER - SECTION	MAJOR DATA GROUPING
1- 00 through 1- 09	General
1- 20 through 1- 29	Fuel
1- 30 through 1- 39	Fluids
1- 40 through 1- 49	Personnel
1- 60 through 1- 69	Cargo
1- 80 through 1- 89	Ground Operations
1- 90 through 1- 99	Examples

The two digit section (SEC) element allows for ten distinct topics within each major group of data (e.g. 20 through 29 for Fuel). The subject (SUB) element is primarily used to uniquely identify topically identical data for varying aircraft configurations. However, in some cases the subject (SUB) element is used to further subdivide topical information.

The Chapter 1 document includes only those topics that apply to the airplanes called out in the “Airplane Configuration” section of the document. The CHP-SEC-SUB number, page numbering, revision date and document number appear on the lower outside corner of each page.

Changes within a revised CHP-SEC-SUB are identified with a solid bar in the outside margin, adjacent to the change. The date for the CHP-SEC-SUB will be revised and the changes will be noted in the revision highlights.

To determine if you have received a complete document, check each section listed in the “Table of Contents” and confirm that the section is included in this document. The total number of pages for each section is specified at the bottom of every page contained within it (e.g. “Page 1 of 4”, where “4” represents the total number of pages in the section).

APPLICABLE CONFIGURATIONS
All

BOEING PROPRIETARY
Export Controlled by ECCN 9E991

INTRODUCTION (Continued)

MANAGING AIRCRAFT CONFIGURATIONS

The “Airplane Configuration” section of this document lists all aircraft covered in this document, along with the allowable configurations associated with each aircraft. Restrictions and limitations for each association of a configuration with a specific aircraft serial number are defined in the same section under the heading “Configuration Qualifications”.

The data presented within each CHP-SEC-SUB module apply to the aircraft configuration(s) listed in the “Applicable Configurations” box at the bottom of each page. The word “All” signifies that the data is applicable to all configurations listed in the “Airplane Configuration” section of this document, whereas data that is applicable to specific aircraft configurations will list only the appropriate configuration letter(s) in the “Applicable Configurations” box.

DOCUMENT NUMBERING

For all 777-300ER Chapter 1 Manuals, document numbering will use the following convention:

D043W5[Y][Z]-[ccc][X]

where **[Y]** = Minor Model Designator (e.g. “2” for a -200 Minor Model)

[Z] = Derivative Designator (0=Passenger, 1=Combi, 2=Freighter, 3=Convertible, 4=Special Freighter, 5=Miscellaneous)

[ccc] = Airline 3-Letter Designator (As per Boeing Standard Designators - CCID)

[X] = Document Serial Number (This will always be “1” unless an airline has multiple Weight & Balance Manuals for a given derivative model.)

CHAPTER 2 - AIRCRAFT REPORTS

The Aircraft Report (covered in a separate document) contains weight and balance data specifically related to each delivered aircraft of the customer's fleet. The data includes: make, model, serial number, registration identification, actual weighing data, and inventory list for the delivery configuration of each aircraft.

APPLICABLE CONFIGURATIONS
All

BOEING PROPRIETARY
Export Controlled by ECCN 9E991

Highlights Revision No: 28

This revision updates the document to current standards.

TABLE OF CONTENTS

- Updated for this revision.

AIRPLANE CONFIGURATION

- Updated for this revision.

INTERIOR EFFECTIVITY

- Updated for this revision.

1-66-801

- Revised to update the pallet lock count for Size Code A pallets.
- Revised to correct the number of Pallet Locks at Balance Arm 1628 (Aft Compartment) for Size Code A ULDs.

APPLICABLE CONFIGURATIONS
All

BOEING PROPRIETARY
Export Controlled by ECCN 9E991

Highlights Revision No: 27

This revision updates the document to current standards.

TABLE OF CONTENTS

- Updated for this revision.

AIRPLANE CONFIGURATION

- Updated for this revision.

INTERIOR EFFECTIVITY

- Updated for this revision.

1-00-042

- Revised to add missing label under graphic.

1-49-023

- Revised to update page one graphic.

1-64-801

- Revised to correct typographical error from "Forward" to "Aft" in tables for Size Code M & N and all Q Longitudinal.

1-66-602

- Deleted note in Loading Considerations regarding Pallet position P22 since it pertains to the Forward Cargo Hold only.

1-66-606

- Deleted note in Loading Considerations regarding Pallet position 22 since it pertains to the Forward Cargo Hold only.

APPLICABLE CONFIGURATIONS
All

BOEING PROPRIETARY
Export Controlled by ECCN 9E991

Highlights Revision No: 26

This revision incorporates miscellaneous changes to the manual.

All pages in this document have been marked with Export Controlled by ECCN 9E991.

TITLE PAGE

- Revised to update format - no data changed.
- Updated export control notes for 9E991.

TABLE OF CONTENTS

- Updated for this revision.

AIRPLANE CONFIGURATION

- Updated for this revision.

INTERIOR EFFECTIVITY

- Updated for this revision.

1-22-002

- Revised to move AD 2016-11-03 related items to Loading Limitations paragraph and to clarify Loading Limitation notes.

1-63-001

- Revised to update Code K, L, P in string loading.

1-63-002

- Revised to update Code K, L, P in string loading.

1-66-002

- Revised to update for intermixing Size Code K, L and P in string loading.

1-66-006

- Revised to update for intermixing Size Code K, L and P in string loading.

1-66-602

- Revised to update for intermixing Size Code K, L and P in string loading.

1-66-606

- Revised to update for intermixing Size Code K, L and P in string loading.

1-68-001

- Revised to update tiedown information.

1-80-082

- Revised to update spelling.

1-90-001

- Revised to update loading schedule ordering instructions.

APPLICABLE CONFIGURATIONS
All

BOEING PROPRIETARY
Export Controlled by ECCN 9E991

Highlights Revision No: 25

This revision increases the MTOW to 775000 LB in lieu of 760000 LB for Serial Number 35783 (WD982) per Master Change 0310MK7335.

TABLE OF CONTENTS

- Updated for this revision.

AIRPLANE CONFIGURATION

- Assigned Configuration "C" to Serial Number 35783 per Master Change 0310MK7335.
- Removed Configuration "D" from Serial Number 35783 per Master Change 0310MK7335.

INTERIOR EFFECTIVITY

- Updated for this revision.

APPLICABLE CONFIGURATIONS
All

BOEING PROPRIETARY
Export Controlled by ECCN 9E991

Highlights Revision No: 24

This revision updates the Fuel Management data to include AD 2016-11-03.

TABLE OF CONTENTS

- Updated for this revision.

AIRPLANE CONFIGURATION

- Updated for this revision.

INTERIOR EFFECTIVITY

- Updated for this revision.

1-22-002

- Revised to update AD 2016-11-03 required date and update Lateral Fuel Imbalance data.

APPLICABLE CONFIGURATIONS
All

BOEING PROPRIETARY
Export Controlled by ECCN 9E991

Highlights Revision No: 23

This revision increases the Maximum Takeoff Weight from 750000 LB to 775000 LB for Serial Number 33501 (WD622) per Master Change 0310MK7320.

TABLE OF CONTENTS

- Updated for this revision.

AIRPLANE CONFIGURATION

- Removed Configuration "A" from Serial Number 33501 per Master Change 0310MK7320.
- Added Configuration "F" to Serial Number 33501 (WD622) per Master Change 0310MK7320.

INTERIOR EFFECTIVITY

- Updated for this revision.

1-02-001

- Revised to update AC 120-27 reference.

1-02-026

- Applicable Configuration(s) set to 'A, B'.

1-02-033

- Applicable Configuration(s) set to 'C'.

1-02-034

- Applicable Configuration(s) set to 'D'.

1-02-056

- Applicable Configuration(s) set to 'E, F'.

1-20-004

- Revised section to facilitate future XML implementation. No change to data.

1-34-001

- Revised section to facilitate future XML implementation. No change to data.

1-40-001

- Revised to update AC 120-27 references.

1-82-001

- Revised to update AC 120-27 reference.

APPLICABLE CONFIGURATIONS
All

BOEING PROPRIETARY
Export Controlled by ECCN 9E991

Highlights Revision No: 22

This revision increases the Maximum Taxi Weight to 777000 LB in lieu of 752000 LB and the MaximumTakeoff Weight to 775000 LB in lieu of 750000 LB for Serial Number 32714 (WD632) per Master Change 0310MK7328.

TABLE OF CONTENTS

- Updated for this revision.

AIRPLANE CONFIGURATION

- Assigned Configuration "E" to Serial Number 32714 per Master Change 0310MK7328.
- Removed Configuration "B" from Serial Number 32714 per Master Change 0310MK7328.

INTERIOR EFFECTIVITY

- Updated for this revision.

APPLICABLE CONFIGURATIONS
All

BOEING PROPRIETARY
Export Controlled by ECCN 9E991

Highlights Revision No: 21

This revision decreases the Maximum Taxi Weight to 752000 LB in lieu of 777000 LB and the Maximum Takeoff Weight to 750000 LB in lieu of 775000 LB for Serial Number 32714 (WD632). The Master Change 0310MK7328 isn't applicable to Serial Number 32714 (WD632) until June 27th, 2019.

TABLE OF CONTENTS

- Updated for this revision.

AIRPLANE CONFIGURATION

- Assigned Configuration "B" to Serial Number 32714 per Master Change 0310MK7328.
- Removed Configuration "E" from Serial Number 32714 per Master Change 0310MK7328.

INTERIOR EFFECTIVITY

- Updated for this revision.

APPLICABLE CONFIGURATIONS
All

BOEING PROPRIETARY
Export Controlled by ECCN 9E991

Highlights Revision No: 20

This revision increases the Maximum Taxi Weight to 777000 LB in lieu of 752000 LB and the Maximum Takeoff Weight to 775000 LB in lieu of 750000 LB for Serial Number 32707 (WD624) per Master Change 0310MK7328.

TABLE OF CONTENTS

- Updated for this revision.

AIRPLANE CONFIGURATION

- Assigned Configuration "F" to Serial Number 32707 per Master Change 0310MK7328.
- Removed Configuration "A" from Serial Number 32707 per Master Change 0310MK7328.

INTERIOR EFFECTIVITY

- Updated for this revision.

APPLICABLE CONFIGURATIONS
All

BOEING PROPRIETARY
Export Controlled by ECCN 9E991

Highlights Revision No: 19

This revision increases the Maximum Taxi Weight to 777000 LB in lieu of 752000 LB and the Maximum Takeoff Weight to 775000 LB in lieu of 750000 LB for Serial Number 32714 (WD632) per Master Change 0310MK7328.

TABLE OF CONTENTS

- Updated for this revision.

AIRPLANE CONFIGURATION

- Assigned Configuration "E" to Serial Number 32714 per Master Change 0310MK7328.
- Removed Configuration "B" from Serial Number 32714 per Master Change 0310MK7328.

INTERIOR EFFECTIVITY

- Updated for this revision.

APPLICABLE CONFIGURATIONS
All

BOEING PROPRIETARY
Export Controlled by ECCN 9E991

Highlights Revision No: 18

This revision increases the Maximum Taxi Weight to 777000 LB in lieu of 752000 LB and the MaximumTakeoff Weight to 775000 LB in lieu of 750000 LB for Serial Number 32713(WD631) per Master Change 0310MK7320.

TABLE OF CONTENTS

- Updated for this revision.

AIRPLANE CONFIGURATION

- Assigned Configuration "E" to Serial Number 32713 per Master Change 0310MK7320.
- Removed Configuration "B" from Serial Number 32713 per Master Change 0310MK7320.

INTERIOR EFFECTIVITY

- Updated for this revision.

APPLICABLE CONFIGURATIONS
All

BOEING PROPRIETARY
Export Controlled by ECCN 9E991

Highlights Revision No: 17

This revision increases the Maximum Taxi Weight to 777000 LB in lieu of 752000 LB and the Maximum Takeoff Weight to 775000 LB in lieu of 750000 LB for Serial Number 32708 (WD623) per Master Change 0310MK7328.

GENERAL

- Added Configuration "F".

TABLE OF CONTENTS

- Updated for this revision.

AIRPLANE CONFIGURATION

- Assigned Configuration "F" to Serial Number 32708 per Master Change0310MK7328.
- Removed Configuration "A" from Serial Number 32708 per Master Change0310MK7328.

INTERIOR EFFECTIVITY

- Updated for this revision.

1-02-056

- Changed Applicable Configuration(s) from 'E' to 'E, F'.

1-48-016

- Changed Applicable Configuration(s) from 'A, B, E' to 'A, B, E, F'.

1-48-401

- Changed Applicable Configuration(s) from 'A, D' to 'A, D, F'.

1-49-012

- Changed Applicable Configuration(s) from 'A, B, E' to 'A, B, E, F'.

1-60-202

- Changed Applicable Configuration(s) from 'A, B, C, E' to 'A, B, C, E, F'.

1-62-802

- Changed Applicable Configuration(s) from 'A, B, D, E' to 'A, B, D, E, F'.

1-63-001

- Changed Applicable Configuration(s) from 'A, B, C, E' to 'A, B, C, E, F'.

1-64-001

- Changed Applicable Configuration(s) from 'A, B, C, E' to 'A, B, C, E, F'.

1-64-602

- Changed Applicable Configuration(s) from 'A, B, C, E' to 'A, B, C, E, F'.

1-66-002

- Changed Applicable Configuration(s) from 'A, B, C, E' to 'A, B, C, E, F'.

1-66-602

- Changed Applicable Configuration(s) from 'A, B, C, E' to 'A, B, C, E, F'.

1-69-001

- Changed Applicable Configuration(s) from 'A, B, C, E' to 'A, B, C, E, F'.

APPLICABLE CONFIGURATIONS
All

BOEING PROPRIETARY
Export Controlled by ECCN 9E991

Highlights Revision No: 16

This revision increases the Maximum Takeoff Weight to 775000 LB in lieu of 750000 LB for Serial Number 32729 (WD630) per Master Change 0310MK7320.

TABLE OF CONTENTS

- Updated for this revision.

AIRPLANE CONFIGURATION

- Assigned Configuration "E" to Serial Number 32729 per Master Change 0310MK7320.
- Removed Configuration "B" from Serial Number 32729 per Master Change 0310MK7320.

INTERIOR EFFECTIVITY

- Updated for this revision.

APPLICABLE CONFIGURATIONS
All

BOEING PROPRIETARY
Export Controlled by ECCN 9E991

Highlights Revision No: 15

This revision increases the Maximum Takeoff Weight to 775000 LB in lieu of 750000 LB for Serial Number 32728 (WD629) per Master Change 0310MK7320.

GENERAL

- Added Section 1-02-056 to manual.
- Added Configuration “E”.

TABLE OF CONTENTS

- Updated for this revision.

AIRPLANE CONFIGURATION

- Assigned Configuration “E” to Serial Number 32728 per Master Change 0310MK7320.
- Removed Configuration “B” from Serial Number 32728 per Master Change 0310MK7320.

INTERIOR EFFECTIVITY

- Updated for this revision.

1-02-056

- Applicable Configuration(s) set to “E”.

1-48-016

- Changed Applicable Configuration(s) from “A, B” to “A, B, E”.

1-48-408

- Changed Applicable Configuration(s) from “B” to “B, E”.

1-49-012

- Changed Applicable Configuration(s) from “A, B” to “A, B, E”.

1-60-202

- Changed Applicable Configuration(s) from “A, B, C” to “A, B, C, E”.

1-62-802

- Changed Applicable Configuration(s) from “A, B, D” to “A, B, D, E”.

1-63-001

- Changed Applicable Configuration(s) from “A, B, C” to “A, B, C, E”.

1-64-001

- Changed Applicable Configuration(s) from “A, B, C” to “A, B, C, E”.

1-64-602

- Changed Applicable Configuration(s) from “A, B, C” to “A, B, C, E”.

1-66-002

- Changed Applicable Configuration(s) from “A, B, C” to “A, B, C, E”.

1-66-602

- Changed Applicable Configuration(s) from “A, B, C” to “A, B, C, E”.

1-69-001

- Changed Applicable Configuration(s) from “A, B, C” to “A, B, C, E”.

APPLICABLE CONFIGURATIONS
All

BOEING PROPRIETARY
Export Controlled by ECCN 9E991

Highlights Revision No: 14

This revision decreases the Maximum Takeoff Weight from 775000 LB to 750000 LB for Serial Numbers 32707 (WD624), 32708 (WD623), and 32714 (WD632) per Master Change 0310MK7320.

GENERAL

- Removed Section 1-02-056 from manual.
- Removed Configuration “E” (no longer applicable).
- Removed Configuration “F” (no longer applicable).

TABLE OF CONTENTS

- Updated for this revision.

AIRPLANE CONFIGURATION

- Assigned Configuration “A” to Serial Number 32707 per Master Change 0310MK7320.
- Assigned Configuration “A” to Serial Number 32708 per Master Change 0310MK7320.
- Assigned Configuration “B” to Serial Number 32714 per Master Change 0310MK7320.
- Removed Configuration “E” from Serial Number 32707 per Master Change 0310MK7320.
- Removed Configuration “E” from Serial Number 32708 per Master Change 0310MK7320.
- Removed Configuration “F” from Serial Number 32714 per Master Change 0310MK7320.

INTERIOR EFFECTIVITY

- Updated for this revision.

1-48-016

- Changed Applicable Configuration(s) from “A, B, E, F” to “A, B”.

1-48-401

- Changed Applicable Configuration(s) from “A, D, E” to “A, D”.

1-48-408

- Changed Applicable Configuration(s) from “B, F” to “B”.

1-49-012

- Changed Applicable Configuration(s) from “A, B, E, F” to “A, B”.

1-60-202

- Changed Applicable Configuration(s) from “A, B, C, E, F” to “A, B, C”.

1-62-802

- Changed Applicable Configuration(s) from “A, B, D, E, F” to “A, B, D”.

1-63-001

- Changed Applicable Configuration(s) from “A, B, C, E, F” to “A, B, C”.

1-64-001

- Changed Applicable Configuration(s) from “A, B, C, E, F” to “A, B, C”.

1-64-602

- Changed Applicable Configuration(s) from “A, B, C, E, F” to “A, B, C”.

1-66-002

- Changed Applicable Configuration(s) from “A, B, C, E, F” to “A, B, C”.

APPLICABLE CONFIGURATIONS
All

BOEING PROPRIETARY
Export Controlled by ECCN 9E991

HIGHLIGHTS REVISION NO: 14 (Continued)

1-66-602

- Changed Applicable Configuration(s) from “A, B, C, E, F” to “A, B, C”.

1-69-001

- Changed Applicable Configuration(s) from “A, B, C, E, F” to “A, B, C”.

APPLICABLE CONFIGURATIONS
All

BOEING PROPRIETARY
Export Controlled by ECCN 9E991

Highlights Revision No: 13

This revision increases the Maximum Takeoff Weight from 750000 LB to 775000 LB for Serial Numbers 37207, 32708 and 32714 per Master Change 0310MK7320.

GENERAL

- Added Section 1-02-056 to manual.
- Added Configuration “E” per Master Change 0310MK7320.
- Added Configuration “F” per Master Change 0130MK7320.

TABLE OF CONTENTS

- Updated for this revision.

AIRPLANE CONFIGURATION

- Assigned Configuration “E” to Serial Number 32707 per Master Change 0310MK7320.
- Assigned Configuration “E” to Serial Number 32708 per Master Change 0310MK7320.
- Assigned Configuration “F” to Serial Number 32714 per Master Change 0130MK7320.
- Removed Configuration “A” from Serial Number 32707 per Master Change 0310MK7320.
- Removed Configuration “A” from Serial Number 32708 per Master Change 0310MK7320.
- Removed Configuration “B” from Serial Number 32714 per Master Change 0130MK7320.

INTERIOR EFFECTIVITY

- Updated for this revision.

1-02-056

- Applicable Configuration(s) set to “E, F”.

1-22-002

- Revised to add Alternative Method of Compliance (AMOC) note.
- Revised to add additional notes to the loading procedures.

1-48-016

- Changed Applicable Configuration(s) from “A, B” to “A, B, E, F”.

1-48-401

- Changed Applicable Configuration(s) from “A, D” to “A, D, E”.

1-48-408

- Changed Applicable Configuration(s) from “B” to “B, F”.

1-49-012

- Changed Applicable Configuration(s) from “A, B” to “A, B, E, F”.

1-60-003

- Revised to update footnotes for barrier net information.
- Revised to update the bulk hold footnote.

1-60-202

- Changed Applicable Configuration(s) from “A, B, C” to “A, B, C, E, F”.

1-62-802

- Changed Applicable Configuration(s) from “A, B, D” to “A, B, D, E, F”.

1-63-001

- Changed Applicable Configuration(s) from “A, B, C” to “A, B, C, E, F”.

APPLICABLE CONFIGURATIONS
All

BOEING PROPRIETARY
Export Controlled by ECCN 9E991

HIGHLIGHTS REVISION NO: 13 (Continued)

1-64-001

- Changed Applicable Configuration(s) from “A, B, C” to “A, B, C, E, F”.

1-64-602

- Changed Applicable Configuration(s) from “A, B, C” to “A, B, C, E, F”.

1-66-002

- Changed Applicable Configuration(s) from “A, B, C” to “A, B, C, E, F”.

1-66-602

- Changed Applicable Configuration(s) from “A, B, C” to “A, B, C, E, F”.

1-66-606

- Revised to update graphic on page 1.

1-66-851

- Updated per coordsheet STRESS-2015-0054, dated November 11, 2016.
- Revised wording to a standardized format.

1-69-001

- Changed Applicable Configuration(s) from “A, B, C” to “A, B, C, E, F”.

APPLICABLE CONFIGURATIONS
All

BOEING PROPRIETARY
Export Controlled by ECCN 9E991

Highlights Revision No: 12

This revision updates Center of Gravity Grids from “rectangular” to “fan” grids, shows the Minimum Flight Weight, incorporates a standardized inflection point round-off policy and adds a control code (for internal tracking purposes only).

In addition, this revision incorporates Cargo, XML implementation and other miscellaneous changes to the manual. Details of the changes made to each section are listed below.

All pages in this document have been marked as Boeing Proprietary.

GENERAL

- Added Section 1-66-851 to manual.
- Added Section 1-66-851 to Configuration “A” .
- Added Section 1-66-851 to Configuration “B” .
- Added Section 1-66-851 to Configuration “C” .
- Added Section 1-66-851 to Configuration “D” .

TITLE PAGE

- Added copyright and Boeing proprietary notes.
- Updated document numbering derivative designator by adding 5=Miscellaneous.
- Corrected spelling error of 5=Miscellaneous in document numbering section.

TABLE OF CONTENTS

- Updated for this revision.

AIRPLANE CONFIGURATION

- Updated for this revision.

INTERIOR EFFECTIVITY

- Updated for this revision.

1-00-042

- Revised to update B.S. data.

1-02-026

- This revision updates all Center of Gravity Grids from “rectangular” to “fan” grids, shows the Minimum Flight Weight, incorporates a standardized inflection point round-off policy and adds a control code (for internal tracking purposes only).

1-02-033

- This revision updates all Center of Gravity Grids from “rectangular” to “fan” grids, shows the Minimum Flight Weight, incorporates a standardized inflection point round-off policy and adds a control code (for internal tracking purposes only).

1-02-034

- This revision updates all Center of Gravity Grids from “rectangular” to “fan” grids, shows the Minimum Flight Weight, incorporates a standardized inflection point round-off policy and adds a control code (for internal tracking purposes only).

1-06-003

- Expanded kilogram weight range for flaps 5, 15 and 20.

1-22-002

- Added minimum fuel density note to page 1 and Boeing Service Bulletin 777-28A0039 reference to page 2.

APPLICABLE CONFIGURATIONS
All

BOEING PROPRIETARY
Export Controlled by ECCN 9E991

HIGHLIGHTS REVISION NO: 12 (Continued)

1-44-013

- Revised section to facilitate future XML implementation. No change to data.

1-49-012

- Revised Door 5 data on page 2.

1-60-003

- Updated footnote [d] and added [e] on page 1.

1-60-202

- Revised to add LD-36 container data.

1-60-206

- Revised to add LD-36 container data.

1-62-602

- Revised to update item number 5 and add item numbers 6 and 7 on page 2.

1-63-021

- Revised to add LD-36 container data.
- Revised to update LD-36 container graphic.

1-64-001

- Updated 24L/24R and 25L/25R ULD data.

1-64-005

- Revised Size Codes K & L subject title on page 3 and updated 24L/24R and 25L/25R ULD data.

1-64-201

- Revised section to facilitate future XML implementation. No change to data.

1-64-801

- Revised section to facilitate future XML implementation. No change to data.

1-66-002

- Updated zone I lock location data.

1-66-006

- Updated zone H lock location data.

1-66-602

- Added missing side restraint/vertical restraint at B.A. 1863 in the Aft Compartment illustration on page 1.

1-66-606

- Added missing center guides at B.A. 1863 in the Aft Compartment illustration on page 1.
- Revised to update graphic on page 1.

1-66-801

- Added missing center guides at B.A. 1863 in the AFt Compartment Size Code M, N and Q illustration on page 1.
- Added missing side restraint/vertical restraint at B.A. 1863 in the Aft Compartment illustration on page 1.

1-66-851

- Applicable Configuration(s) set to “All”.

1-68-042

- Revised section to facilitate future XML implementation. No change to data.

APPLICABLE CONFIGURATIONS
All

BOEING PROPRIETARY
Export Controlled by ECCN 9E991

HIGHLIGHTS REVISION NO: 12 (Continued)

1-68-062

- Revised section to facilitate future XML implementation. No change to data.

1-69-001

- Revised to add data for LD-36 container.
- Revised to update LD-36 container graphic.

1-69-002

- Revised section to facilitate future XML implementation. No change to data.
- Revised to add data for LD-36 container.

1-90-001

- Revised section to facilitate future XML implementation. No change to data.

APPLICABLE CONFIGURATIONS
All

BOEING PROPRIETARY
Export Controlled by ECCN 9E991

Highlights Revision No: 11

This revision updates fuel section 1-20-0xx for all effectivities in the manual per Service Letter 777-SL-02-008 “UPDATED USABLE AND UNUSABLE FUEL QUANTITIES - WEIGHT AND BALANCE MANUAL REVISION”. In addition, this revision incorporates miscellaneous changes to the manual. Details of the changes made to each section are listed below.

GENERAL

- Added Section 1-48-016 to manual.
- Added Section 1-60-206 to manual.
- Added Section 1-64-005 to manual.
- Removed Section 1-64-002 from manual.
- Added Section 1-60-206 to Configuration “D” .
- Added Section 1-64-005 to Configuration “D” .
- Added Section 1-48-016 to Configurations “A” and “B” to account for video equipment in forward closet.
- Removed Section 1-60-202 from Configuration “D” (no longer applicable).
- Removed Section 1-64-002 from Configuration “D” (no longer applicable).
- Removed Section 1-48-001 from Configurations “A” and “B” (no longer applicable).

TITLE PAGE

- Updated EAR99 classification designation.
- Updated 9E991 classification designation.

TABLE OF CONTENTS

- Updated for this revision.

AIRPLANE CONFIGURATION

- Updated for this revision.

INTERIOR EFFECTIVITY

- Added variable number column to the table.
- LOPA-773-070 updated to Revision P.
- LOPA-773-075 updated to Revision S.

1-00-001

- Added metric conversion factors.

1-02-033

- Revised to correct shaded area on the Kilogram C.G. grid.

1-20-004

- Updated usable fuel quantity B.A. data.
- Updated usable and unusable fuel quantities.

1-44-013

- Revised data for all LOPAs in manual.

1-48-001

- Changed Applicable Configuration(s) from “A, B, D” to “D”.

1-48-016

- Applicable Configuration(s) set to “A, B”.

APPLICABLE CONFIGURATIONS
All

BOEING PROPRIETARY
Export Controlled by ECCN 9E991

HIGHLIGHTS REVISION NO: 11 (Continued)

1-60-202

- Updated CHP-SEC referenced in note [b] on pages 2 and 3.
- Added data for LD-3-45 and LD-3-45W containers.
- Changed Applicable Configuration(s) from “All” to “A, B, C”.

1-60-206

- Applicable Configuration(s) set to “D”.

1-62-401

- Added information for the bulk cargo carriage in the containerized lower hold.
- Updated allowable package sizes B.A. data on page 4.

1-62-602

- Revised to add barrier net information for the aft cargo compartment.
- Added information for the bulk cargo carriage in the containerized lower hold.
- Corrected package size illustration on page 3.
- Updated allowable package sizes B.A. data on page 4.

1-63-001

- Updated TSO-C90 reference.
- Added data for LD-3-45 and LD-3-45W containers.

1-63-002

- Updated TSO-C90 reference and added data for LD-3-45 and LD-3-45W containers.

1-63-021

- Updated TSO-C90 reference.

1-64-001

- Removed lateral guides from graphic.

1-64-005

- Applicable Configuration(s) set to “D”.

1-64-201

- Removed lateral guides from graphic.

1-64-602

- Revised to remove lateral guides from graphics. No data changed.
- Revised to adjust change bars - no data changed.

1-64-604

- Revised to remove lateral guides from graphics. No data changed.

1-64-801

- Revised to remove lateral guides from graphics. No data changed.
- Revised to adjust change bars - no data changed.

1-66-002

- Corrected graphic to show 6 locks instead of 4 at B.A. 436.7, 497.1 and 557.5.

1-68-001

- Added center bulk compartment strap orientation restrictions diagram and corrected Fwd/Aft allowable load equation.
- Updated example 2 data.

APPLICABLE CONFIGURATIONS
All

BOEING PROPRIETARY
Export Controlled by ECCN 9E991

HIGHLIGHTS REVISION NO: 11 (Continued)

- Updated General Information section on page 1 and updated CHP-SEC references .

1-68-081

- Revised to add cargo door net fittings note.

1-69-001

- Added data for LD-3-45 and LD-3-45W containers.

1-69-002

- Added data for LD-3-45 and LD-3-45W containers.

1-80-082

- Clarified wheel centerline is equal to axle centerline.
- Revised to remove words “Jack Point” from the Mid Axle description.
- Revised to adjust change bars - no data changed.

1-82-001

- Updated fuel data.

APPLICABLE CONFIGURATIONS
All

BOEING PROPRIETARY
Export Controlled by ECCN 9E991

Highlights Revision No: 10

This revision corrects the drawing for LOPA 773-075 revision N.

TABLE OF CONTENTS

- Updated for this revision.

AIRPLANE CONFIGURATION

- Updated for this revision.

INTERIOR EFFECTIVITY

- Updated for this revision.

1-44-013

- Corrected drawing of LOPA 773-075.

APPLICABLE CONFIGURATIONS
All

BOEING PROPRIETARY
Export Controlled by ECCN 9E991

Highlights Revision No: 9

This revision adds Serial Numbers 35782 (WD981) and 35783 (WD982) to the manual and updates LOPA 773-070 to revision N.

GENERAL

- Added Section 1-02-034 to manual.
- Added Section 1-49-019 to manual.
- Added Section 1-60-801 to manual.
- Added Section 1-63-002 to manual.
- Added Section 1-64-002 to manual.
- Added Section 1-64-604 to manual.
- Added Section 1-66-006 to manual.
- Added Section 1-66-606 to manual.
- Added Section 1-69-002 to manual.
- Removed Section 1-60-801 from manual.
- Added Configuration “D” per Customer Specific Option Selection AUX73E0001 dated February 6, 2009.
- Added Section 1-64-604 to Configuration “D” .
- Removed Section 1-60-801 from Configuration “D” (no longer applicable).
- Removed Section 1-64-602 from Configuration “D” (no longer applicable).
- Added LOPA-773-075 to Section 1-44-013 per effectivity of LOPA drawing.

TITLE PAGE

- Added EAR99 classification designation.

TABLE OF CONTENTS

- Updated for this revision.

AIRPLANE CONFIGURATION

- Added Serial Number 35782.
- Added Serial Number 35783.
- Assigned Configuration “D” to Serial Number 35782 per Customer Specific Option Selection AUX73E0001 dated February 6, 2009.
- Assigned Configuration “D” to Serial Number 35783 per Customer Specific Option Selection AUX73E0002 dated February 6, 2009.

INTERIOR EFFECTIVITY

- LOPA-773-070 updated to Revision N.
- Added Serial Number 35782.
- Added Serial Number 35783.
- Added LOPA-773-075.
- Added LOPA-773-075 to Serial Number 35782.
- Added LOPA-773-075 to Serial Number 35783.

1-02-026

- Added weight label for Alternate Forward C.G. Limit.
- Revised to add interpolation note.

1-02-033

- Revised to add interpolation note.

1-02-034

- Applicable Configuration(s) set to “D”.

APPLICABLE CONFIGURATIONS
All

BOEING PROPRIETARY
Export Controlled by ECCN 9E991

HIGHLIGHTS REVISION NO: 9 (Continued)

1-22-002

- Added line number and referenced PRR 61998-2.

1-44-013

- Added LOPA-773-075 and updated LOPA 773-070 to revision N.

1-48-001

- Changed Applicable Configuration(s) from “A, B” to “A, B, D”.

1-48-401

- Changed Applicable Configuration(s) from “A” to “A, D”.

1-49-019

- Applicable Configuration(s) set to “D”.

1-62-802

- Changed Applicable Configuration(s) from “A, B” to “A, B, D”.

1-63-001

- Removed Size Code Q Longitudinal data.
- Changed Applicable Configuration(s) from “All” to “A, B, C”.

1-63-002

- Applicable Configuration(s) set to “D”.

1-63-021

- Added Size Code Q Longitudinal data.

1-64-001

- Changed Applicable Configuration(s) from “All” to “A, B, C”.

1-64-002

- Applicable Configuration(s) set to “D”.

1-64-602

- Changed Applicable Configuration(s) from “All” to “A, B, C”.

1-64-604

- Applicable Configuration(s) set to “D”.

1-66-002

- Changed Applicable Configuration(s) from “All” to “A, B, C”.

1-66-006

- Applicable Configuration(s) set to “D”.

1-66-602

- Changed Applicable Configuration(s) from “All” to “A, B, C”.

1-66-606

- Applicable Configuration(s) set to “D”.

1-69-001

- Changed Applicable Configuration(s) from “All” to “A, B, C”.

APPLICABLE CONFIGURATIONS
All

BOEING PROPRIETARY
Export Controlled by ECCN 9E991

HIGHLIGHTS REVISION NO: 9 (Continued)

1-69-002

- Applicable Configuration(s) set to “D”.

1-82-001

- Updated Airplane Weighing Procedure.

1-86-042

- Updated weights for the Main Gear Components.

1-86-052

- Updated weights for Nose Gear Components.

APPLICABLE CONFIGURATIONS
All

BOEING PROPRIETARY
Export Controlled by ECCN 9E991

Highlights Revision No: 8

This revision adds Serial Number 35302 (WD966) to the manual. In addition, miscellaneous changes have been made to the manual. Details of the changes are listed below.

GENERAL

- Added Section 1-02-033 to manual.
- Added Section 1-48-006 to manual.
- Added Section 1-48-403 to manual.
- Added Section 1-49-022 to manual.
- Added Section 1-49-023 to manual.
- Added Section 1-62-801 to manual.
- Added Configuration “C”.
- Added LOPA-773-070 to Section 1-44-013 per effectivity of LOPA drawing.

TITLE PAGE

- Removed the customer specific model designator.

TABLE OF CONTENTS

- Updated for this revision.

AIRPLANE CONFIGURATION

- Removed registry numbers.
- Added Serial Number 35302.
- Assigned Configuration “C” to Serial Number 35302 per Customer Specific Option Selection VBI73E0001, dated July 25, 2008.

INTERIOR EFFECTIVITY

- Added Serial Number 35302.
- Added LOPA-773-070.
- Added LOPA-773-070 to Serial Number 35302.

1-02-026

- Changed Applicable Configuration(s) from “All” to “A, B”.

1-02-033

- Applicable Configuration(s) set to “C”.

1-40-001

- Revised the paragraph under passengers.

1-44-013

- Added LOPA-773-070.

1-48-001

- Changed Applicable Configuration(s) from “All” to “A, B”.

1-48-006

- Applicable Configuration(s) set to “C”.

1-48-403

- Applicable Configuration(s) set to “C”.

1-49-012

- Changed Applicable Configuration(s) from “All” to “A, B”.

APPLICABLE CONFIGURATIONS
All

BOEING PROPRIETARY
Export Controlled by ECCN 9E991

HIGHLIGHTS REVISION NO: 8 (Continued)

1-49-023

- Applicable Configuration(s) set to “C”.

1-62-801

- Applicable Configuration(s) set to “C”.

1-62-802

- Changed Applicable Configuration(s) from “All” to “A, B”.

1-63-001

- Revised LD-2 dimension label and added data referencing TSO-C90.

1-63-021

- Changed “certified” to “approved”, added non-approved ULD criteria and revised Caution notes. Corrected volume of P1 pallet and added data referencing TSO-C90.

1-68-001

- Section number reference changed from “1-60-02x” to “1-60-2xx” and “1-66-02x to 1-66-2xx” and added list of requirements for tying down non-approved unit load devices.

1-84-002

- Added a bullet in towing and tipping considerations and added a note.

APPLICABLE CONFIGURATIONS
All

BOEING PROPRIETARY
Export Controlled by ECCN 9E991

Highlights Revision No: 7

This revision updates LOPA 773-049 to Revision G. In addition, miscellaneous changes have been made to the manual. Details of the changes are listed below.

GENERAL

- Removed Section 1-60-801 (old 1-60-081) from manual.
- Removed Section 1-60-801 from Configuration “A” (no longer applicable).
- Removed Section 1-60-801 from Configuration “B” (no longer applicable).

TABLE OF CONTENTS

- Updated for this revision.

AIRPLANE CONFIGURATION

- Updated for this revision.

INTERIOR EFFECTIVITY

- LOPA-773-049 updated to Revision G.

1-44-013

- Revised LOPA-773-049.

1-48-401

- Section number changed from “1-48-081” to “1-48-401”.

1-48-408

- Section number changed from “1-48-088” to “1-48-408”.

1-60-202

- Section number changed from “1-60-022” to “1-60-202” and the section number reference changed from “1-64-02x” to “1-64-2xx” and “1-64-08x to 1-64-8xx”.

1-62-401

- Section number changed from “1-62-041” to “1-62-401”.

1-62-602

- Section number changed from “1-62-062” to “1-62-602”.

1-62-802

- Section number changed from “1-62-082” to “1-62-802”.

1-64-201

- Section number changed from “1-64-021” to “1-64-201”.

1-64-602

- Section number changed from “1-64-062” to “1-64-602”.

1-64-801

- Section number changed from “1-64-081” to “1-64-801” and the section number reference changed from “1-64-06x” to “1-64-6xx”.

1-66-203

- Section number changed from “1-66-023” to “1-66-203”.

1-66-602

- Section number changed from “1-66-062” to “1-66-602”.

APPLICABLE CONFIGURATIONS
All

BOEING PROPRIETARY
Export Controlled by ECCN 9E991

HIGHLIGHTS REVISION NO: 7 (Continued)

1-66-801

- Section number changed from “1-66-081” to “1-66-801”.

1-68-001

- Section number reference changed from “1-60-02x” to “1-60-2xx” and “1-66-02x to 1-66-2xx”.

APPLICABLE CONFIGURATIONS
All

BOEING PROPRIETARY
Export Controlled by ECCN 9E991

Highlights Revision No: 6

This revision adds Serial Number 32714 (WD632) to the manual.

TABLE OF CONTENTS

- Updated for this revision.

AIRPLANE CONFIGURATION

- Added Serial Number 32714.
- Assigned Configuration “B” to Serial Number 32714 per Customer Specific Option Selection EAD73E2012 dated April 3, 2007.

INTERIOR EFFECTIVITY

- Added Serial Number 32714.
- Added LOPA-773-049 to Serial Number 32714.

1-22-002

- Added fuel usage procedure per Boeing Service Bulletin 777-28A0040.

1-90-001

- Revised ordering information.

APPLICABLE CONFIGURATIONS
All

BOEING PROPRIETARY
Export Controlled by ECCN 9E991

Highlights Revision No: 5

This revision adds Serial Numbers 32713 (WD631) and 32729 (WD630) and makes miscellaneous changes to the manual. Details of changes made to each section are listed below.

TABLE OF CONTENTS

- Updated for this revision.

AIRPLANE CONFIGURATION

- Added Serial Numbers 32713 and 32729.
- Assigned Configuration “B” to Serial Numbers 32713 and 32729 per Customer Specific Option Selections EAD73E2011 and EAD73E2010, dated Feb 02, 2007.

INTERIOR EFFECTIVITY

- LOPA-773-049 updated to Revision E.
- Added Serial Numbers 32713 and 32729.
- Added LOPA-773-049 to Serial Numbers 32713 and 32729.

1-02-026

- Added reference to alternate forward takeoff limits.

1-60-022

- Revised to clarify the tiedown restrictions in the tables.

APPLICABLE CONFIGURATIONS
All

BOEING PROPRIETARY
Export Controlled by ECCN 9E991

Highlights Revision No: 4

This revision adds Serial Number 32728 (WD629) to the manual.

TABLE OF CONTENTS

- Updated for this revision.

AIRPLANE CONFIGURATION

- Added Serial Number 32728.
- Assigned Configuration “B” to Serial Number 32728 per Customer Specific Option Selection EAD73E2009, dated Aug 23, 2006.

INTERIOR EFFECTIVITY

- Added Serial Number 32728.
- Added LOPA-773-049 to Serial Number 32728.

1-06-003

- Updated data per Coordination Sheet AERO-B-BBA2-C05-0852 dated 5 August, 2005.

APPLICABLE CONFIGURATIONS
All

BOEING PROPRIETARY
Export Controlled by ECCN 9E991

Highlights Revision No: 3

This revision adds Serial Numbers 32715 (WD627) and 32730 (WD628) to the manual.

GENERAL

- Added Section 1-48-088 to manual.
- Added Configuration “B”.
- Added LOPA-773-049 to Section 1-44-013 per effectivity of LOPA drawing.

TABLE OF CONTENTS

- Updated for this revision.

AIRPLANE CONFIGURATION

- Added Serial Number 32715.
- Added Serial Number 32730.
- Assigned Configuration “B” to Serial Number 32715 per Customer Specific Option Selection EAD73E2007, dated June 21, 2006.
- Assigned Configuration “B” to Serial Number 32730 per Customer Specific Option Selection EAD73E2008, dated June 21, 2006.

INTERIOR EFFECTIVITY

- Added Serial Number 32715.
- Added Serial Number 32730.
- Added LOPA-773-049.
- Added LOPA-773-049 to Serial Number 32715.
- Added LOPA-773-049 to Serial Number 32730.

1-44-013

- Added data for LOPA-773-049.

1-48-081

- Changed Applicable Configuration(s) from “All” to “A”.

1-48-088

- Applicable Configuration(s) set to “B”.

APPLICABLE CONFIGURATIONS
All

BOEING PROPRIETARY
Export Controlled by ECCN 9E991

Highlights Revision No: 2

This revision adds Serial Number 32710 (WD626) and makes miscellaneous changes to the manual. Details of changes made to each section are listed below.

TABLE OF CONTENTS

- Updated for this revision.

AIRPLANE CONFIGURATION

- Added Serial Number 32710.
- Assigned Configuration “A” to Serial Number 32710 per Customer Specific Option Selection EAD73E2006, dated May 15/2006.

INTERIOR EFFECTIVITY

- Added Serial Number 32710.
- Added LOPA-773-034 to Serial Number 32710.

1-24-002

- Revised to correct balance arm on page 1.

1-63-001

- Revised LD-2 dimension label.

1-80-082

- Added equations to jack point scales.

1-82-001

- Revised sentence for airplane weighing on Page 1. Revised wording on table from “Nose up” to “Tail down” to reflect wording of actual airplane placard.

APPLICABLE CONFIGURATIONS
All

BOEING PROPRIETARY
Export Controlled by ECCN 9E991

Highlights Revision No: 1

This revision adds Serial Numbers 32707, 32708 and 32709 and makes miscellaneous changes to the manual. Details of changes made to each section are listed below.

TITLE PAGE

- Corrected header on Introduction page.

TABLE OF CONTENTS

- Updated for this revision.

AIRPLANE CONFIGURATION

- Revised paragraph to redefine applicability of data.
- Added Serial Numbers 32707, 32708 and 32709.
- Assigned Configuration “A” to Serial Numbers 32707, 32708 and 32709 per Customer Specific Option Selection EAD73E2003, EAD73E2004 and EAD73E2005, dated Aug 02/2005.

INTERIOR EFFECTIVITY

- LOPA-773-034 updated to Revision P.
- LOPA-773-034 updated to Revision R.
- LOPA-773-034 updated to Revision T.
- Added Serial Numbers 32707, 32708 and 32709.
- Added LOPA-773-034 to Serial Numbers 32707, 32708 and 32709.

1-02-001

- Added “taxi” to operations which need airplane balance accounted for, removed reference to Federal Aviation Regulations Part 121, and added reference to Advisory Circular AC 120-27D.
- Updated reference of Advisory Circular 120-27D to Advisory Circular 120-27E.

1-02-026

- Added reference to Airplane Maintenance Manual Section 12-15-03 for tire pressure requirements.

1-04-004

- Corrected typographical errors.

1-22-002

- Revised the reference to the Airplane Flight Manual to Section 1.

1-30-004

- Revised the table Integrated Drive Generator Oil B.A. locations.

1-40-001

- Updated reference of Advisory Circular 120-27D to Advisory Circular 120-27E.

1-48-081

- Arranged callouts on the drawing . No data affected.

1-82-001

- Updated referenced FAA Advisory Circular from AC 120-27C to 120-27E.

1-86-064

- Revised to update weights on componets.

1-90-001

- Removed reference to standardized loading schedule.

APPLICABLE CONFIGURATIONS
All

BOEING PROPRIETARY
Export Controlled by ECCN 9E991

Highlights Revision No: Original Release

Original Release.

APPLICABLE CONFIGURATIONS
All

BOEING PROPRIETARY
Export Controlled by ECCN 9E991

TABLE OF CONTENTS

TITLE	CHP-SEC-SUB	DATE/PAGE	CONFIGURATION
PREFACE			
INTRODUCTION		01/20/2023	All
Chapter 1 - Control		3	
Managing Aircraft Configurations		4	
Document Numbering		4	
Chapter 2 - Aircraft Reports		4	
HIGHLIGHTS REVISION NO: 28		12/15/2025	All
HIGHLIGHTS REVISION NO: 27		04/09/2025	All
HIGHLIGHTS REVISION NO: 26		10/16/2023	All
HIGHLIGHTS REVISION NO: 25		10/14/2021	All
HIGHLIGHTS REVISION NO: 24		06/23/2021	All
HIGHLIGHTS REVISION NO: 23		09/14/2020	All
HIGHLIGHTS REVISION NO: 22		06/26/2019	All
HIGHLIGHTS REVISION NO: 21		05/31/2019	All
HIGHLIGHTS REVISION NO: 20		05/29/2019	All
HIGHLIGHTS REVISION NO: 19		05/21/2019	All
HIGHLIGHTS REVISION NO: 18		05/10/2019	All
HIGHLIGHTS REVISION NO: 17		04/01/2019	All
HIGHLIGHTS REVISION NO: 16		03/26/2019	All
HIGHLIGHTS REVISION NO: 15		10/31/2018	All
HIGHLIGHTS REVISION NO: 14		08/21/2018	All
HIGHLIGHTS REVISION NO: 13		08/08/2018	All
HIGHLIGHTS REVISION NO: 12		08/11/2016	All
HIGHLIGHTS REVISION NO: 11		07/20/2012	All
HIGHLIGHTS REVISION NO: 10		04/03/2009	All
HIGHLIGHTS REVISION NO: 9		03/27/2009	All
HIGHLIGHTS REVISION NO: 8		08/05/2008	All
HIGHLIGHTS REVISION NO: 7		08/29/2007	All
HIGHLIGHTS REVISION NO: 6		04/09/2007	All
HIGHLIGHTS REVISION NO: 5		02/02/2007	All
HIGHLIGHTS REVISION NO: 4		08/25/2006	All
HIGHLIGHTS REVISION NO: 3		07/26/2006	All
HIGHLIGHTS REVISION NO: 2		05/17/2006	All
HIGHLIGHTS REVISION NO: 1		09/09/2005	All
HIGHLIGHTS REVISION NO: ORIGINAL RELEASE		01/14/2005	All
AIRPLANE CONFIGURATION		12/15/2025	All
Configuration Assignment		1	
Configuration Qualifications		1	
INTERIOR EFFECTIVITY		12/15/2025	All
Main Cabin		1	

APPLICABLE CONFIGURATIONS
All

BOEING PROPRIETARY
Export Controlled by ECCN 9E991

TABLE OF CONTENTS (Continued)

TITLE	CHP-SEC-SUB	DATE/PAGE	CONFIGURATION
GENERAL			
GENERAL INFORMATION	1-00-001	07/31/2009	All
Weight and Balance Definitions		1	
Abbreviations		4	
Conversion Factors		5	
AIRPLANE DIMENSIONS	1-00-024	04/02/2004	All
General Arrangement and Primary Dimensions		1	
BALANCE REFERENCE SYSTEM	1-00-042	04/24/2024	All
Balance Arms / Body Stations		1	
Mean Aerodynamic Chord		1	
Body Buttock Line		2	
Water Line		2	
FACTORS AFFECTING PERFORMANCE AND OPERATIONAL LIMITATIONS	1-02-001	05/14/2020	All
Interpolation of Certified Center of Gravity Limits		1	
Operational Weight and Center of Gravity Requirements		1	
Commonwealth of Independent States (CIS) Requirements		2	
CERTIFIED WEIGHT AND CENTER OF GRAVITY LIMITS	1-02-026	03/03/2016	A, B
Certified Weight Limits - MTW 752000 LB (341101 KG)		1	
Limitations		1	
Interpolation of Certified Center of Gravity Limits		1	
C.G. Limits - MTW 752000 LB, MLW 554000 LB, MZFW 524000 LB		2	
C.G. Limits - MTW 341101 KG, MLW 251290 KG, MZFW 237682 KG		3	
CERTIFIED WEIGHT AND CENTER OF GRAVITY LIMITS	1-02-033	03/03/2016	C
Certified Weight Limits - MTW 777000 LB (352441 KG)		1	
Limitations		1	
Interpolation of Certified Center of Gravity Limits		1	
C.G. Limits - MTW 777000 LB, MLW 554000 LB, MZFW 524000 LB		2	
C.G. Limits - MTW 352441 KG, MLW 251290 KG, MZFW 237682 KG		3	
CERTIFIED WEIGHT AND CENTER OF GRAVITY LIMITS	1-02-034	03/03/2016	D
Certified Weight Limits - MTW 762000 LB (345637 KG)		1	
Limitations		1	
Interpolation of Certified Center of Gravity Limits		1	
C.G. Limits - MTW 762000 LB, MLW 554000 LB, MZFW 524000 LB		2	
C.G. Limits - MTW 345637 KG, MLW 251290 KG, MZFW 237682 KG		3	
CERTIFIED WEIGHT AND CENTER OF GRAVITY LIMITS	1-02-056	03/03/2016	E, F
Certified Weight Limits - MTW 777000 LB (352441 KG)		1	
Limitations		1	
Interpolation of Certified Center of Gravity Limits		1	
C.G. Limits - MTW 777000 LB, MLW 554000 LB, MZFW 524000 LB		2	
C.G. Limits - MTW 352441 KG, MLW 251290 KG, MZFW 237682 KG		3	

APPLICABLE CONFIGURATIONS
All

BOEING PROPRIETARY
Export Controlled by ECCN 9E991

TABLE OF CONTENTS (Continued)

TITLE	CHP-SEC-SUB	DATE/PAGE	CONFIGURATION
AIRPLANE LATERAL IMBALANCE LIMITS	1-04-004	06/20/2005	All
Lateral Imbalance		1	
Lateral Imbalance Limitations (Pounds)		2	
Lateral Imbalance Limitations (Kilograms)		3	
TAKEOFF HORIZONTAL STABILIZER TRIM SETTING	1-06-003	01/24/2013	All
GE90-115B Engines - English Units Flaps 5 - Multiple Green Bands		1	
GE90-115B Engines - Metric Units Flaps 5 - Multiple Green Bands		2	
GE90-115B Engines - English Units Flaps 15 - Multiple Green Bands		3	
GE90-115B Engines - Metric Units Flaps 15 - Multiple Green Bands		4	
GE90-115B Engines - English Units Flaps 20 - Multiple Green Bands		5	
GE90-115B Engines - Metric Units Flaps 20 - Multiple Green Bands		6	
GE90-115B Engines - English Units Flaps 5 - Multiple Green Bands		7	
GE90-115B Engines - Metric Units Flaps 5 - Multiple Green Bands		8	
GE90-115B Engines - English Units Flaps 15 - Multiple Green Bands		9	
GE90-115B Engines - Metric Units Flaps 15 - Multiple Green Bands		10	
GE90-115B Engines - English Units Flaps 20 - Multiple Green Bands		11	
GE90-115B Engines - Metric Units Flaps 20 - Multiple Green Bands		12	
LANDING GEAR AND FLAP MOVEMENT BALANCE EFFECT	1-08-002	10/09/2002	All
Landing Gear Retraction Moment		1	
Flaps Retraction Moment		1	

FUEL

FUEL TANK ARRANGEMENT AND CAPACITIES	1-20-004	11/21/2019	All
Fuel Tank Locations		1	
Maximum Allowable Fuel Weight		2	
Usable Fuel Quantities and Locations		2	
Unusable Fuel Quantities and Locations		3	
FUEL MANAGEMENT	1-22-002	11/17/2022	All
Fuel Loading Procedures		1	
Lateral Fuel Imbalance		1	
Fuel Usage Procedures		3	
APU Fuel Usage		3	
FUEL TANK QUANTITIES AND BALANCE ARMS	1-24-002	02/08/2006	All
Combined Main Tanks 1 and 2 in U.S. Gallons		1	
Combined Main Tanks 1 and 2 in Liters		5	
FUEL TANK QUANTITIES AND BALANCE ARMS	1-24-022	03/16/2004	All
Center Tank in U.S. Gallons		1	
Center Tank in Liters		5	

APPLICABLE CONFIGURATIONS
All

BOEING PROPRIETARY
Export Controlled by ECCN 9E991

TABLE OF CONTENTS (Continued)

TITLE	CHP-SEC-SUB	DATE/PAGE	CONFIGURATION
FLUIDS			
SYSTEM FLUIDS	1-30-004	06/28/2005	All
Engine System Oil (GENERAL ELECTRIC GE90-115B ENGINES)		1	
Integrated Drive Generator Oil		1	
Variable Speed Constant Frequency Generator Oil		1	
Hydraulic System Fluid		2	
Landing Gear System Fluid		2	
Operating System Fluid		2	
POTABLE WATER SYSTEM	1-32-002	10/30/2002	All
Tank Quantities and Locations		1	
WASTE DISPOSAL SYSTEM	1-34-001	11/21/2019	All
Tank Quantities and Locations		1	
PERSONNEL			
PASSENGER AND PERSONNEL WEIGHT ALLOWANCES	1-40-001	05/14/2020	All
FAA Advisory Circular 120-27 WEIGHT Allowances		1	
INTERIOR ARRANGEMENT - MAIN DECK	1-44-013	08/11/2016	All
Flight Deck		1	
Main Cabin - 42C/385Y Arrangement		2	
Main Cabin - 42C/400Y Arrangement		5	
Main Cabin - 33C/328Y Arrangement		8	
Main Cabin - 18F/40C/384Y Arrangement		11	
GALLEY WEIGHTS - FIXED POSITIONS	1-48-001	03/29/2002	D
Maximum Allowable Weights - Door 1		1	
GALLEY WEIGHTS - FIXED POSITIONS	1-48-006	03/29/2002	C
Maximum Allowable Weights - Door 1		1	
GALLEY WEIGHTS - FIXED POSITIONS	1-48-016	06/08/2012	A, B, E, F
Maximum Allowable Weights - Door 1		1	
GALLEY WEIGHTS - FIXED POSITIONS	1-48-401	06/27/2007	A, D, F
Maximum Allowable Weights - Door 5		1	
GALLEY WEIGHTS - FIXED POSITIONS	1-48-403	06/27/2007	C
Maximum Allowable Weights - Door 5		1	
GALLEY WEIGHTS - FIXED POSITIONS	1-48-408	06/27/2007	B, E
Maximum Allowable Weights - Door 5		1	
GALLEY WEIGHTS - FLEX ZONES	1-49-012	11/09/2012	A, B, E, F
Maximum Allowable Weights		1	

APPLICABLE CONFIGURATIONS
All

BOEING PROPRIETARY
Export Controlled by ECCN 9E991

TABLE OF CONTENTS (Continued)

TITLE	CHP-SEC-SUB	DATE/PAGE	CONFIGURATION
GALLEY WEIGHTS - FLEX ZONES	1-49-019	08/13/2007	D
Maximum Allowable Weights		1	
GALLEY WEIGHTS - FLEX ZONES	1-49-023	04/09/2025	C
Maximum Allowable Weights		1	
CARGO			
CARGO COMPARTMENT LOAD LIMITS	1-60-003	05/09/2017	All
Maximum Allowable Weights		1	
Maximum Combined Linear Load Limits		2	
CERTIFIED UNIT LOAD DEVICE WEIGHTS BY POSITION	1-60-202	04/20/2016	A, B, C, E, F
Unit Load Device Positions - Lower Deck		1	
CERTIFIED UNIT LOAD DEVICE WEIGHTS BY POSITION	1-60-206	04/20/2016	D
Unit Load Device Positions - Lower Deck		1	
CARGO COMPARTMENTS	1-62-001	04/14/1998	All
General Location and Arrangement		1	
FORWARD CARGO COMPARTMENTS	1-62-401	07/03/2012	All
Forward Cargo Compartment Volumes		1	
Forward Cargo Compartment Cross Sections		1	
Cargo Door Dimensions and Allowable Package Sizes		2	
AFT CARGO COMPARTMENTS	1-62-602	04/20/2016	All
Aft Cargo Compartment Volumes		1	
Aft Cargo Compartment Cross Sections		1	
Cargo Door Dimensions and Allowable Package Sizes		2	
BULK CARGO COMPARTMENT	1-62-801	06/27/2007	C
Bulk Cargo Compartment Volume		1	
Bulk Cargo Compartment Cross Sections		1	
Cargo Door Dimensions and Allowable Package Sizes		3	
BULK CARGO COMPARTMENT	1-62-802	06/27/2007	A, B, D, E, F
Bulk Cargo Compartment Volume		1	
Bulk Cargo Compartment Cross Sections		2	
Cargo Door Dimensions and Allowable Package Sizes		4	
UNIT LOAD DEVICES - LOWER DECK	1-63-001	10/13/2023	A, B, C, E, F
Size Codes K, L and P		1	
Volumes and Center of Gravity Limits		2	
Dimensions and Lateral Positions		3	
UNIT LOAD DEVICES - LOWER DECK	1-63-002	10/13/2023	D
Size Codes K, L, P and Q		1	
Volumes and Center of Gravity Limits		2	
Dimensions and Lateral Positions		3	

APPLICABLE CONFIGURATIONS
All

BOEING PROPRIETARY
Export Controlled by ECCN 9E991

TABLE OF CONTENTS (Continued)

TITLE	CHP-SEC-SUB	DATE/PAGE	CONFIGURATION
UNIT LOAD DEVICES - LOWER DECK	1-63-021	08/11/2016	All
Size Codes A, M, N and Q Longitudinal		1	
Volumes and Center of Gravity Limits		2	
Dimensions and Lateral Positions		3	
FORWARD COMPARTMENT UNIT LOAD DEVICE LOCATIONS	1-64-001	02/18/2013	A, B, C, E, F
Size Codes K & L		1	
Size Codes K & L Alternate		2	
Size Code P		3	
Size Code P Alternate		4	
FORWARD COMPARTMENT UNIT LOAD DEVICE LOCATIONS	1-64-005	02/18/2013	D
Size Codes K & L		1	
Size Codes K & L Alternate One		2	
Size Codes K & L Alternate Two		3	
Size Codes P		4	
Size Code P Alternate One		5	
Size Code P Alternate TWO		6	
FORWARD COMPARTMENT UNIT LOAD DEVICE LOCATIONS	1-64-201	08/10/2015	All
Size Code A		1	
Size Codes M & N		2	
Size Code Q (LD-4) Longitudinal		3	
Size Code Q (LD-8) Longitudinal		4	
AFT COMPARTMENT UNIT LOAD DEVICE LOCATIONS	1-64-602	10/03/2011	A, B, C, E, F
Size Codes K & L		1	
Size Code P		2	
AFT COMPARTMENT UNIT LOAD DEVICE LOCATIONS	1-64-604	05/07/2012	D
Size Codes K, L & Q		1	
Size Code P		2	
AFT COMPARTMENT UNIT LOAD DEVICE LOCATIONS	1-64-801	11/01/2024	All
Size Code A		1	
Size Codes M & N		2	
Size Code Q (LD-4) Longitudinal		3	
Size Code Q (LD-8) Longitudinal		4	
FORWARD COMPARTMENT UNIT LOAD DEVICE LOAD LIMITS	1-66-002	10/11/2023	A, B, C, E, F
Cargo Restraint System - Size Codes K, L, & P		1	
Load Limits - Size Codes K, L, & P		2	
FORWARD COMPARTMENT UNIT LOAD DEVICE LOAD LIMITS	1-66-006	10/11/2023	D
Cargo Restraint System - Size Codes K, L, & P		1	
Load Limits - Size Codes K, L, & P		2	

APPLICABLE CONFIGURATIONS
All

BOEING PROPRIETARY
Export Controlled by ECCN 9E991

TABLE OF CONTENTS (Continued)

TITLE	CHP-SEC-SUB	DATE/PAGE	CONFIGURATION
FORWARD COMPARTMENT UNIT LOAD DEVICE LOAD LIMITS	1-66-203	06/27/2007	All
Cargo Restraint System - Size Codes A, M, N, & Q Longitudinal		1	
Load Limits - Size Codes A, M, N, & Q Longitudinal		2	
AFT COMPARTMENT UNIT LOAD DEVICE LOAD LIMITS	1-66-602	11/01/2024	A, B, C, E, F
Cargo Restraint System - Size Codes K, L, & P		1	
Load Limits - Size Codes K, L, & P		2	
AFT COMPARTMENT UNIT LOAD DEVICE LOAD LIMITS	1-66-606	11/05/2024	D
Cargo Restraint System - Size Codes K, L, P and Q		1	
Load Limits - Size Codes K, L, P and Q		2	
AFT COMPARTMENT UNIT LOAD DEVICE LOAD LIMITS	1-66-801	10/20/2025	All
Cargo Restraint System - Size Codes A, M, N & Q Longitudinal		1	
Load Limits - Size Codes A, M, N & Q Longitudinal		2	
BARRIER NET	1-66-851	03/02/2017	All
AFT AND BULK HOLDS		1	
CARGO TIEDOWNS - LOWER DECK	1-68-001	10/11/2023	All
General Information		1	
Tiedown Allowables		3	
Tiedown Calculation		6	
Tiedown Example		10	
TIEDOWN FITTING LOCATIONS - FORWARD COMPARTMENTS	1-68-042	08/10/2015	All
Fitting Locations		1	
TIEDOWN FITTING LOCATIONS - AFT COMPARTMENTS	1-68-062	08/10/2015	All
Fitting Locations		1	
TIEDOWN FITTING LOCATIONS - BULK COMPARTMENT	1-68-081	02/03/2011	All
Fitting Locations		1	
CARGO LATERAL IMBALANCE CONTROL	1-69-001	08/11/2016	A, B, C, E, F
Procedure for Calculation of Imbalance		1	
CARGO LATERAL IMBALANCE CONTROL	1-69-002	04/20/2016	D
Procedure for Calculation of Imbalance		1	
GROUND OPERATIONS			
AIRPLANE JACKING	1-80-003	12/07/2004	All
Jack Point Locations		1	
Maximum Allowable Jacking Loads		2	
Limitations Envelopes		3	
MAIN LANDING GEAR JACK POINTS FOR VARIOUS OLEO EXTENSIONS	1-80-082	08/31/2023	All
Jack Point Balance Arms Versus Oleo Extension		1	

APPLICABLE CONFIGURATIONS
All

BOEING PROPRIETARY
Export Controlled by ECCN 9E991

TABLE OF CONTENTS (Continued)

TITLE	CHP-SEC-SUB	DATE/PAGE	CONFIGURATION
AIRPLANE WEIGHING PROCEDURE	1-82-001	05/14/2020	All
General Information		1	
Weighing Facilities and Equipment		1	
Preparation for Airplane Weighing		1	
Weighing Operation		3	
Weighing Procedure Using Platform Scales		3	
Weighing Procedure Using Electronic Load Cells		4	
Non-Level Weighing		6	
TOWING AND TIPPING LIMITATIONS	1-84-002	09/24/2007	All
Towing and Tipping Considerations		1	
Towing and Tipping Limits (English)		2	
Towing and Tipping Limits (Metric)		3	
COMPONENT WEIGHTS AND BALANCE ARMS	1-86-002	10/30/2002	All
Wing Components		1	
COMPONENT WEIGHTS AND BALANCE ARMS	1-86-011	04/14/1998	All
Horizontal Stabilizer Components		1	
COMPONENT WEIGHTS AND BALANCE ARMS	1-86-021	04/14/1998	All
Vertical Fin Components		1	
COMPONENT WEIGHTS AND BALANCE ARMS	1-86-032	03/29/2002	All
Body Components		1	
COMPONENT WEIGHTS AND BALANCE ARMS	1-86-042	12/09/2008	All
Main Gear Components		1	
COMPONENT WEIGHTS AND BALANCE ARMS	1-86-052	12/09/2008	All
Nose Gear Components		1	
COMPONENT WEIGHTS AND BALANCE ARMS	1-86-064	06/15/2005	All
Nacelle and Power Plant Components		1	

EXAMPLES

LOADING SCHEDULE DEVELOPMENT	1-90-001	08/10/2023	All
Introduction		1	

APPLICABLE CONFIGURATIONS
All

BOEING PROPRIETARY
Export Controlled by ECCN 9E991

AIRPLANE CONFIGURATION

The engineering data and FAA certification provided by this document are applicable and valid only for the airplane as defined in the Type Design at delivery, and as modified by the incorporation of any Boeing Supplemental Type Certificate (STC) or Service Bulletin. With respect to any third party STC configuration, either pre-delivery or post-delivery, it shall be the responsibility of the buyer to obtain the data and appropriate regulatory agency approval.

CONFIGURATION ASSIGNMENT

The table shown below correlates each airplane serial number to the currently allowed configuration(s) for that airplane. Each configuration is designated by a different letter. Configuration qualifications are listed following the table and indicate the change authorization involved for airplanes with multiple allowable configurations. Because there may be multiple configuration letters applicable to any serial number, and also multiple configuration qualifications listed for any configuration letter, care should be exercised when determining the configuration letter which correctly reflects the applicable configuration of the airplane.

LINE NUMBER	SERIAL NUMBER	VARIABLE NUMBER	CONFIGURATION						
506	32706	WD621	A						
539	32707	WD624	F						
536	32708	WD623	F						
551	32709	WD625	A						
569	32710	WD626	A						
628	32713	WD631	E						
641	32714	WD632	E						
582	32715	WD627	B						
594	32728	WD629	E						
619	32729	WD630	E						
585	32730	WD628	B						
516	33501	WD622	F						
745	35302	WD966	C						
778	35782	WD981	D						
786	35783	WD982	C						

CONFIGURATION QUALIFICATIONS

APPLICABLE CONFIGURATIONS
All

BOEING PROPRIETARY
Export Controlled by ECCN 9E991

INTERIOR EFFECTIVITY

The tabular data shown below correlates each airplane serial number to the passenger arrangement(s) certified for that airplane. Each passenger arrangement is designated by drawing number and revision letter. To locate a particular passenger arrangement(s), refer to the interior section listed below. Drawing numbers are listed beside each interior drawing in the interior section.

MAIN CABIN

Weight and balance data for each drawing identified in the following table are provided in Section 1-44-013 of this manual.

SERIAL NUMBER	VARIABLE NUMBER	PASSENGER ARRANGEMENT EFFECTIVITY - MAIN CABIN					
		DRAWING #	REV	DRAWING #	REV	DRAWING #	REV
32706	WD621	LOPA-773-034	T				
32707	WD624	LOPA-773-034	T				
32708	WD623	LOPA-773-034	T				
32709	WD625	LOPA-773-034	T				
32710	WD626	LOPA-773-034	T				
32713	WD631	LOPA-773-049	G				
32714	WD632	LOPA-773-049	G				
32715	WD627	LOPA-773-049	G				
32728	WD629	LOPA-773-049	G				
32729	WD630	LOPA-773-049	G				
32730	WD628	LOPA-773-049	G				
33501	WD622	LOPA-773-034	T				
35302	WD966	LOPA-773-070	P				
35782	WD981	LOPA-773-075	S				
35783	WD982	LOPA-773-075	S				

APPLICABLE CONFIGURATIONS
All

BOEING PROPRIETARY
Export Controlled by ECCN 9E991

GENERAL INFORMATION

WEIGHT AND BALANCE DEFINITIONS

The following definitions are provided to assist operators in having a better understanding of the terms used throughout the Weight and Balance Manual.

General Terms or Acronyms

Balance Arm (B.A.)	A true measure of distance from forward to aft, in inches, from a fixed datum. The fixed datum is selected by the airplane manufacturer. Balance Arms are used in weight and balance calculations. To see the relationship between B.A. and B.S., refer to CHP-SEC-SUB 1-00-04x of this manual.
Body Station (B.S.)	A manufacturing location on the airplane. For first of an airplane model, B.S. are continuous from the front to the aft of the airplane. For later versions that are either stretched (i.e. fuselage inserts added) or shrunk (i.e. fuselage sections removed), B.S. becomes discontinuous, for manufacturing reasons. To see the relationship between B.A. and B.S., refer to CHP-SEC-SUB 1-00-04x of this manual.
Layout of Passenger Arrangement (LOPA)	A Boeing internal drawing that depicts the interior layout.
Layout of Passenger Systems (LOPS)	A Boeing internal drawing that depicts the interior layout.

Weight Terms

Basic Empty Weight (BEW)	Standard Basic Empty Weight plus or minus weight of standard item variations.
Delivery Empty Weight (DEW)	Manufacturer's Empty Weight, less any shortages, plus those standard items and operational items in aircraft at time of delivery.
Fleet Empty Weight (FEW)	Average Basic Empty Weight used for a fleet or group of aircraft of the same model and configuration. (The weight of any fleet member shall not vary more than the tolerance established by government regulations.)
Guaranteed Weight	Weight the manufacturer clearly defines and guarantees, subject to contractual tolerances and adjustments.
Manufacturer's Empty Weight (MEW)	Weight of structure, powerplant, furnishings, systems and other items of equipment that are an integral part of a particular aircraft configuration. (It is essentially a “dry” weight, including only those fluids contained in closed systems.)
Maximum Payload	Maximum Zero Fuel Weight minus Operational Empty Weight.
Operational Empty Weight (OEW)	Basic Empty Weight or Fleet Empty Weight plus operational items.

APPLICABLE CONFIGURATIONS
All

BOEING PROPRIETARY
Export Controlled by ECCN 9E991

GENERAL INFORMATION (Continued)

Operational Items	Personnel, equipment and supplies necessary for a particular operation but not included in Basic Empty Weight. These items may vary for a particular aircraft and may include, but are not limited to, the following: ❑ Crew and Baggage ❑ Manuals and navigational equipment ❑ Removable service equipment for cabin, galley and bar ❑ Food and beverage, including liquor ❑ Usable fluids other than those in useful load ❑ Life rafts, life vests and emergency transmitters ❑ Aircraft unit load devices
Operational Landing Weight (OLW)	Maximum authorized weight for landing. (It is subject to airport, operational and related restrictions. It must not exceed maximum certified landing weight.)
Operational Takeoff Weight (OTOW)	Maximum authorized weight for takeoff. (It is subject to airport, operational and related restrictions. This is the weight at start of takeoff run and must not exceed maximum certified takeoff weight.)
Payload	Weight of the passengers, cargo and baggage. (These may be revenue and/or nonrevenue.)
Standard Basic Empty Weight (SBEW)	Manufacturer's Empty Weight plus standard items.
Standard Items	Equipment and fluids not considered an integral part of a particular aircraft and not a variation for the same type of aircraft. These items may include, but are not limited to, the following: ❑ Unusable fuel and other unusable fluids ❑ Engine oil ❑ Toilet fluid and chemical ❑ Fire extinguishers, pyrotechnics and emergency oxygen equipment ❑ Structure in galley, buffet and bar ❑ Supplementary electronic equipment
Useful Load	Difference between takeoff weight and Operational Empty Weight. (It includes payload, usable fuel and other usable fluids not included as operational items.)
Zero Fuel Weight	Operational Empty Weight plus payload. (This weight must not exceed Maximum Zero Fuel Weight.)

APPLICABLE CONFIGURATIONS
All

BOEING PROPRIETARY
Export Controlled by ECCN 9E991

GENERAL INFORMATION (Continued)

Weight Limitation Terms

Maximum Landing Weight (MLW)	Maximum weight for landing as limited by aircraft strength and airworthiness requirements.
Maximum Takeoff Weight (MTOW)	Maximum weight at brake release as limited by aircraft strength and airworthiness requirements.
Maximum Taxi Weight (MTW)	Maximum weight for ground maneuver as limited by aircraft strength and airworthiness requirements. (It includes weight of taxi and runup fuel.)
Maximum Zero Fuel Weight (MZFW)	Maximum weight allowed before usable fuel must be loaded in the aircraft as limited by strength and airworthiness requirements.
Minimum Flight Weight (MFW)	Minimum weight for flight as limited by aircraft strength and airworthiness requirements.

Fuel Terms

Unusable Fuel	Fuel remaining after a fuel runout test has been completed in accordance with government regulations. (It includes drainable unusable fuel plus unusable portion of trapped fuel.)
Drainable Unusable Fuel	Unusable fuel minus unusable portion of trapped fuel.
Trapped Unusable Fuel	Unusable fuel remaining when aircraft is defueled by normal means using the procedures and attitudes specified for draining the tanks.
Usable Fuel	Fuel available for aircraft propulsion.
Drainable Usable Fuel	Usable fuel that can be drained from the aircraft by normal means using the procedures and attitudes specified for draining the tanks.
Trapped Usable Fuel	Usable fuel remaining in the fuel feed and engine lines after standard tank defueling.

Curtailments

Cargo Location Variation	Operational margin placed within the certified center of gravity limits to compensate for the effect of reasonable variations in cargo location when partially unrestricted cargo placement is permitted.
Fuel Density Variation	Operational margin placed within the certified center of gravity limits to compensate for the effect of fuel density variation.
Fuel Usage	Operational margin placed within the certified center of gravity limits to compensate for the effect of fuel management during the critical portions of flight.
Gear and Flap Movement	Operational margin placed within the certified center of gravity limits to compensate for the effect of extending or retracting landing gear and flaps.

APPLICABLE CONFIGURATIONS
All

BOEING PROPRIETARY
Export Controlled by ECCN 9E991

GENERAL INFORMATION (Continued)

In-flight Movement	Operational margin placed within the certified center of gravity limits to compensate for the effect of reasonable passenger, crew, and cart movement during flight.
Loading Schedule	A hardcopy or computerized form used to record the aircraft's weight, load distribution and other appropriate information; to calculate and check the weight and balance conditions of the aircraft against operational limitations; and to establish the stabilizer trim setting for takeoff.
Operational Empty Weight Variation	Operational margin placed within the certified center of gravity limits to compensate for the known variations in the standard and operational items.
Passenger Seating Variation	Operational margin placed within the certified center of gravity limits to compensate for the effect of reasonable variations in passenger center of gravity when unrestricted seating is permitted.

Balance Terms

Fleet Center-of-Gravity	Average Basic Empty Weight center of gravity used for a fleet or group of aircraft of the same model and configuration. (The center of gravity of any fleet member shall not vary more than the maximum tolerance established by government regulations.)

ABBREVIATIONS

The following terms, when necessary, will be abbreviated as shown below.

UNIT	ABBREVIATION	UNIT	ABBREVIATION
Pounds	LB	Inches	IN.
Kilograms	KG	Feet	FT
U. S. Gallons	U.S. GAL.	Square Feet	SQ FT
Liters	L	Cubic Feet	CU FT
Number	NO.	Inboard	INBD
Forward	FWD	Outboard	OUTBD
Balance Arm	B.A.	Mean Aerodynamic Chord	MAC
Body Buttock Line	B.B.L.	Leading Edge of the MAC	LEMAC
Water Line	W.L.	Center of Gravity	C.G.

APPLICABLE CONFIGURATIONS
All

BOEING PROPRIETARY
Export Controlled by ECCN 9E991

GENERAL INFORMATION (Continued)

CONVERSION FACTORS

The data in this manual is provided in both English and Metric units. Unless otherwise stated, the conversions listed below are used throughout this manual.

MULTIPLY	BY	TO OBTAIN
Pounds	0.45359237	Kilograms
U. S. Gallons	3.78541180	Liters
Inches	2.54000000	Centimeters
Feet	0.30480000	Meters

When totals or summations are required the English values are summed separately from the metric values. Differences may occur when comparing the English totals with the metric totals due to round off.

All metric values are converted from English values. When using the conversion factors in this manual, all resultants will be rounded except when the value is a weight limitation. For minimum or maximum weight limitations the resultant metric values will be rounded up or truncated, whichever is more conservative.

APPLICABLE CONFIGURATIONS
All

BOEING PROPRIETARY
Export Controlled by ECCN 9E991

AIRPLANE DIMENSIONS

GENERAL ARRANGEMENT AND PRIMARY DIMENSIONS

The following figure shows the 777-300ER general arrangement and primary dimensions for a configuration with the large aft cargo door.

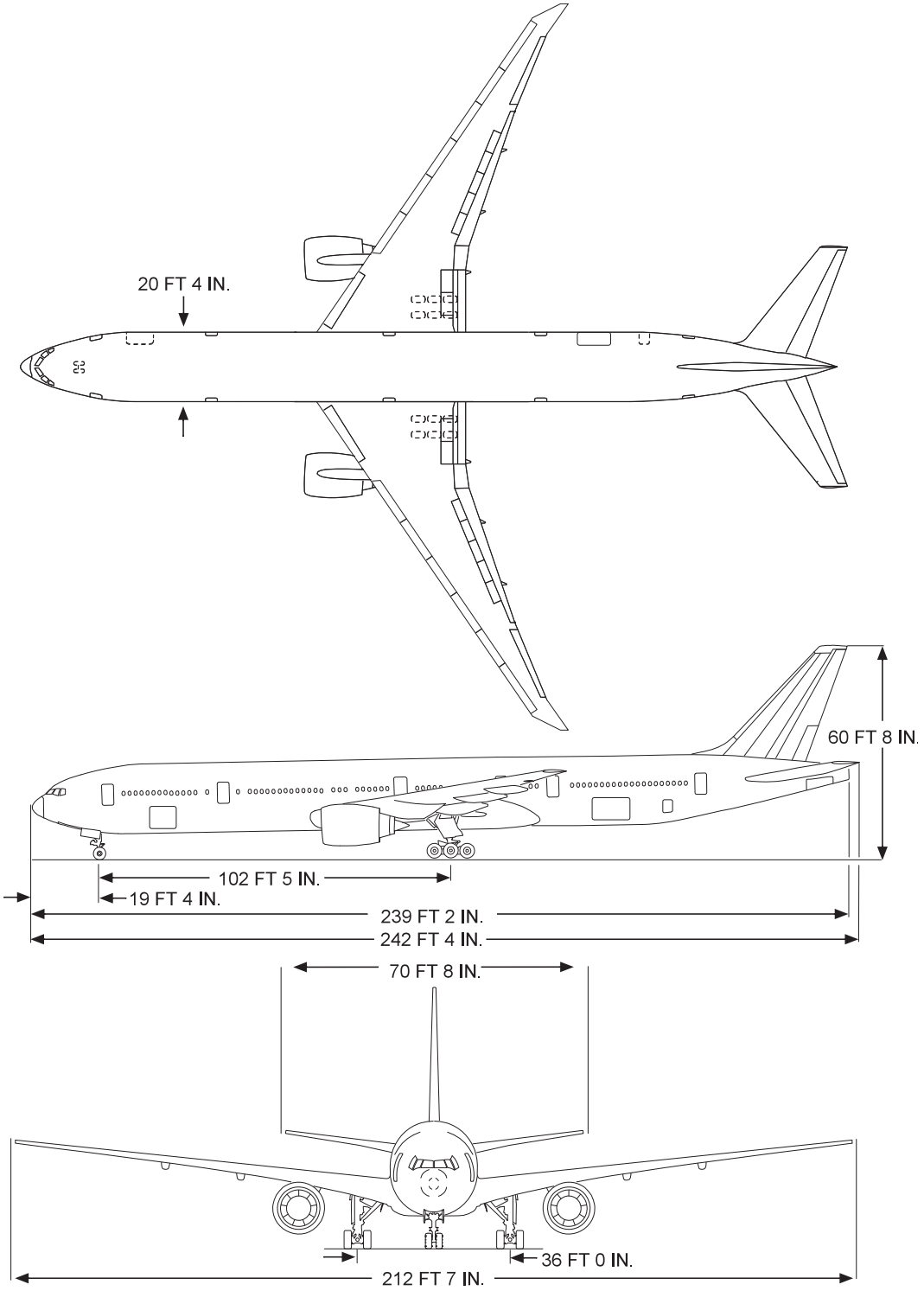

APPLICABLE CONFIGURATIONS
All

BOEING PROPRIETARY
Export Controlled by ECCN 9E991

BALANCE REFERENCE SYSTEM

BALANCE ARMS / BODY STATIONS

Longitudinal location of all airplane component centers of gravity identified throughout this manual will be referred to as Balance Arms. The Balance Arm is a true measure in inches from the reference datum 117.5 IN. aft of the airplane nose.

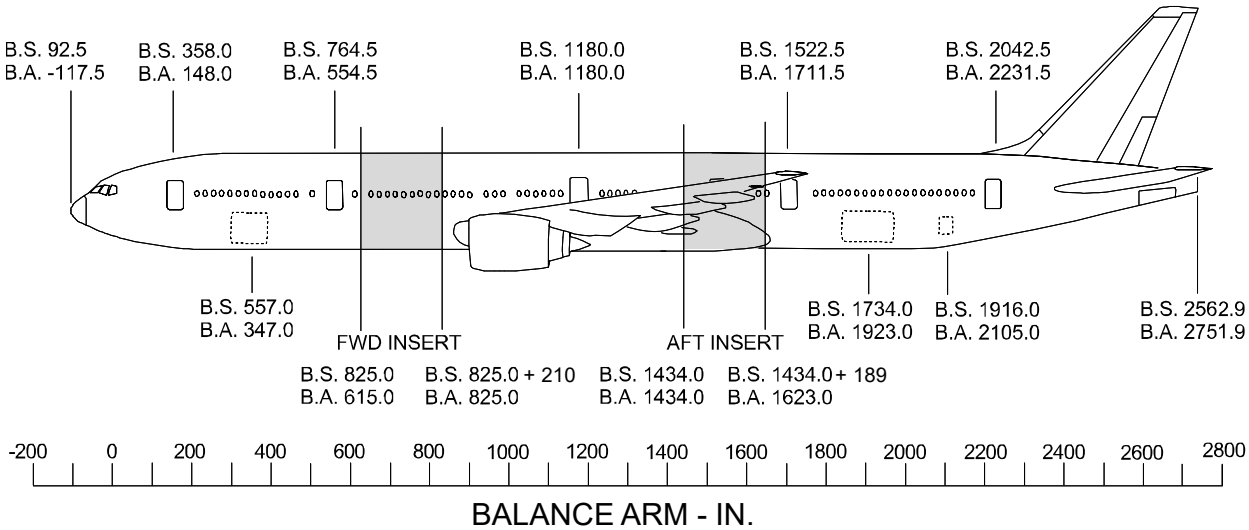

The following table provides Body Station to Balance Arm conversion data.

BODY STATION - IN.	ADJUSTMENT - IN.	BALANCE ARM - IN.
92.5 to 825	-210	-117.5 to 615
Fwd Body Insert	B.A. 615 + X	615 to 825
825 + 210 to 1434	0	825 to1434
Aft Body Insert	B.A. 1434 + X	1434 to 1623
1434 + 189 to 2562.9	+189	1623 to 2751.9

MEAN AERODYNAMIC CHORD

The Mean Aerodynamic Chord, as used in this manual, is a wing reference distance with a length of 278.5 IN. The Leading Edge of the Mean Aerodynamic Chord is at Balance Arm 1174.5 IN. Conversion of the airplane center of gravity from Balance Arm, in inches, to a percentage of Mean Aerodynamic Chord is derived using the following formula:

$$\%MAC = \frac{(B.A. - 1174.5) \times 100.0}{278.5}$$

The reverse conversion of the airplane center of gravity from a percentage of Mean Aerodynamic Chord to Balance Arm, in inches, is derived using the following formula:

$$B.A. = \frac{(278.5 \times \%MAC)}{100.0} + 1174.5$$

APPLICABLE CONFIGURATIONS
All

BOEING PROPRIETARY
Export Controlled by ECCN 9E991

BALANCE REFERENCE SYSTEM (Continued)

BODY BUTTOCK LINE

The Body Buttock Line is a vertical line or a vertical plane parallel to the centerline of the airplane used to locate points or planes to the left or right of the airplane centerline.

WATER LINE

The Water Line is a horizontal reference line or a horizontal plane parallel to the main deck floor used to locate points or planes vertically. The Water Line is measured from the reference datum 200.5 IN. below the top of the main deck floor.

APPLICABLE CONFIGURATIONS
All

BOEING PROPRIETARY
Export Controlled by ECCN 9E991

FACTORS AFFECTING PERFORMANCE AND OPERATIONAL LIMITATIONS

INTERPOLATION OF CERTIFIED CENTER OF GRAVITY LIMITS

CHP-SEC 1-02-xxx presents the certified weight and center of gravity limits by identifying inflection points (end points) for each limit in terms of weight and %MAC. Intermediate points between the inflection points must be determined by interpolating the weight and moment, not the weight and %MAC. The moment is calculated for any given weight and %MAC by using the following formula:

$$\text{Moment} = \text{Weight} \times \left[\frac{(278.5 \times \%\text{MAC})}{100.0} + 1174.5 \right]$$

Weight versus moment grids can be presented in various ways. The Loading Schedule Substantiation documents referenced in CHP-SEC 1-90-00x typically show weight and center of gravity limits converted to a weight versus index. The index values on these grids are an alternate way of displaying moment and are calculated using an index equation. Interpolating intermediate points using weight and index is equivalent to weight and moment.

OPERATIONAL WEIGHT AND CENTER OF GRAVITY REQUIREMENTS

To comply with the performance and operational limitations of the Federal Aviation Regulations, the allowable takeoff weight and the landing weight may be restricted to less than the Maximum Takeoff Weight and the Maximum Landing Weight respectively. The Operational Takeoff Weight may be limited by the most restrictive of the following requirements:

- Operational Takeoff Weight for altitude and temperature
- Takeoff field length requirements
- Tire speed and brake energy limits
- Tire pressure
- Obstacle clearance, enroute and landing requirements
- Noise requirements

The Operational Landing Weight may be limited by the most restrictive of the following requirements:

- Landing field length requirements
- Maximum approach and landing climb weight for altitude and temperature
- Noise requirements

These may not be all of the limitations; see the Airplane Flight Manual for further information.

To ensure that the airplane center of gravity remains within the center of gravity limits, airplane balance must be accounted for with all load conditions during all taxi, takeoff, flight and landing operations. Appropriate constraints must be established and applied to the center of gravity limits as required to account for such changes in the airplane balance condition as due to:

- Cargo location variation
- Fuel density variation
- Fuel usage
- Gear and flap movement
- In-flight movement
- Passenger seating variation

The data in the remainder of this manual will allow the operator to develop these constraints. For guidance in accounting for these items, refer to Advisory Circular 120-27.

APPLICABLE CONFIGURATIONS
All

BOEING PROPRIETARY
Export Controlled by ECCN 9E991

FACTORS AFFECTING PERFORMANCE AND OPERATIONAL LIMITATIONS

COMMONWEALTH OF INDEPENDENT STATES (CIS) REQUIREMENTS

Airplanes operating under the regulatory agency of the Commonwealth of Independent States (CIS) are required to be in compliance with NLGS-3 (comparable to FAR Part 25). Aviation Register (AR) Specialists identified changes to some Boeing procedural documents that would be necessary to be in compliance with NLGS-3 and operate in the CIS.

Continuous Cold Weather Operations

Boeing document number D012W301, “The Aviation Register Requirements for Operation in the Commonwealth of Independent States”, defines a procedure for airplanes operating continuously in cold weather (i.e. ground temperatures below the freezing point). When these conditions exist, ice builds up in the interior of the airplane. The Maintenance Manual Section of document D012W301 defines the prescribed maximum flight hours before removal of interior ice is required.

APPLICABLE CONFIGURATIONS
All

BOEING PROPRIETARY
Export Controlled by ECCN 9E991

CERTIFIED WEIGHT AND CENTER OF GRAVITY LIMITS

CERTIFIED WEIGHT LIMITS - MTW 752000 LB (341101 KG)

The Maximum Certified Gross Weights and Center of Gravity Limits are shown graphically on pages 2 & 3. These Center of Gravity Limits are for taxi, takeoff, flight and landing unless otherwise specified, and are the absolute limits which must not be exceeded by the airplane center of gravity in any taxi, takeoff, flight, or landing configuration.

CERTIFIED GROSS WEIGHTS			
		LB	KG
Maximum Taxi Weight	(MTW)	752000	341101
Maximum Takeoff Weight	(MTOW)	750000	340194
Maximum Landing Weight	(MLW)	554000	251290
Maximum Zero Fuel Weight	(MZFW)	524000	237682
Minimum Flight Weight	(MFW)	305500	138573

LIMITATIONS

The following limitations must be met in order to use the certified gross weight and center of gravity limits:

- Minimum Tire Size Required
  - Nose Gear - 43X17.5R-17/32 Ply Rating
  - Main Gear - 52X21R-22/36 Ply Rating
- Minimum Wheel Size Required
  - Nose Gear - S294W5201-309 or S294W522-560
  - Main Gear - S294W5101-315 or S294W512-580
- Refer to the Airplane Flight Manual “Operation with Alternate Forward Center of Gravity Limit for Takeoff” for use of Alternate Forward C.G. Limits.
- Refer to the Airplane Maintenance Manual Section 12-15-03 for minimum tire pressure requirements.

INTERPOLATION OF CERTIFIED CENTER OF GRAVITY LIMITS

The certified weight and center of gravity limits shown in this section identify the inflection points (end points) for each weight in terms of weight and % MAC. Intermediate points between the inflection points must be determined by interpolating the weight and moment. The method of interpolation is presented in CHP-SEC 1-02-00x.

APPLICABLE CONFIGURATIONS
A, B

BOEING PROPRIETARY
Export Controlled by ECCN 9E991

CERTIFIED WEIGHT AND CENTER OF GRAVITY LIMITS (Continued)

C.G. LIMITS - MTW 752000 LB, MLW 554000 LB, MZFW 524000 LB

The following diagram represents the certified Center of Gravity Limits in English units:

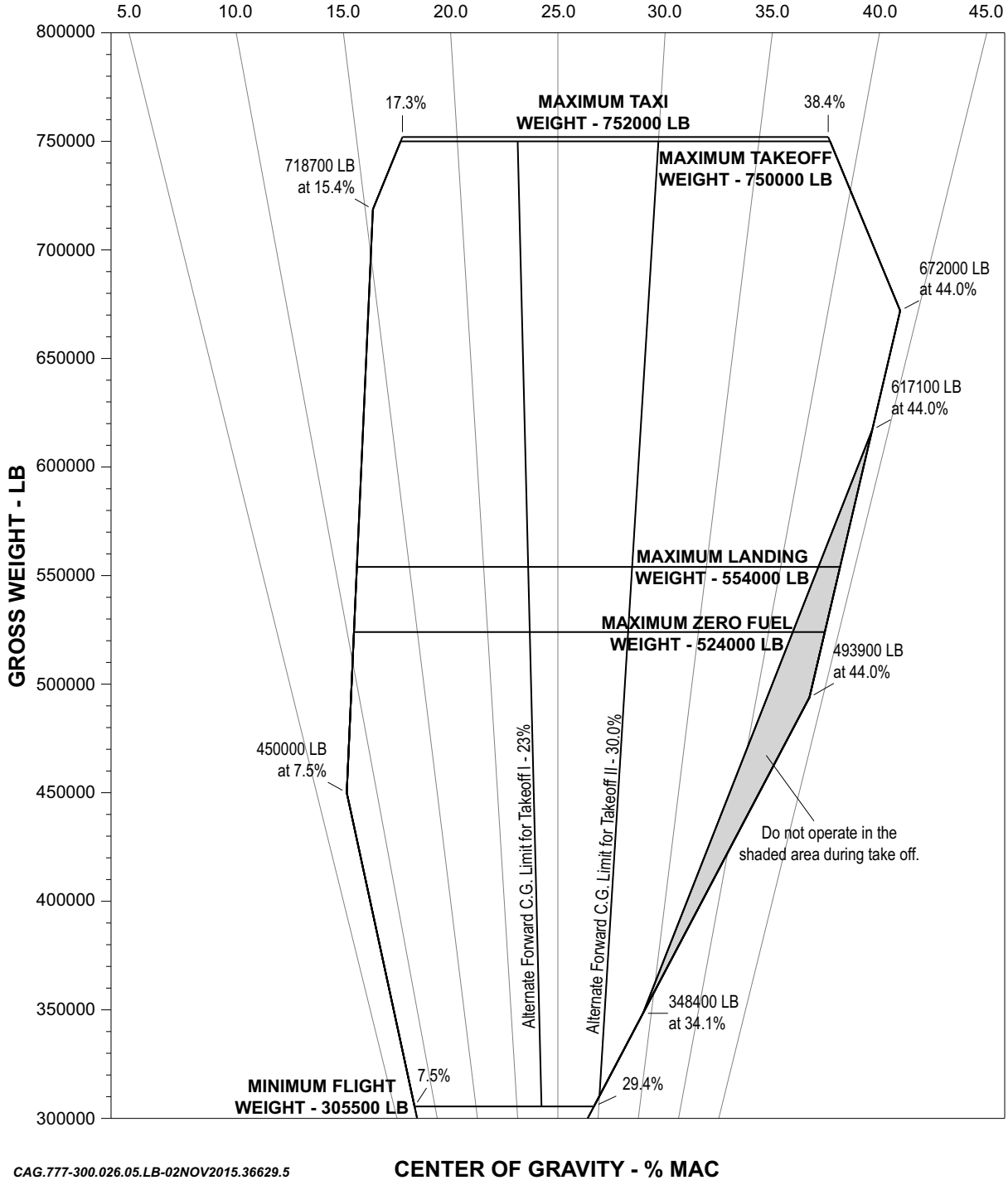

WARNING REFER TO PAGE 1 OF THIS SUBJECT FOR LIMITATIONS TO THE C.G. LIMITS.

APPLICABLE CONFIGURATIONS
A, B

BOEING PROPRIETARY
Export Controlled by ECCN 9E991

CERTIFIED WEIGHT AND CENTER OF GRAVITY LIMITS (Continued)

C.G. LIMITS - MTW 341101 KG, MLW 251290 KG, MZFW 237682 KG

The following diagram represents the certified Center of Gravity Limits in Metric units:

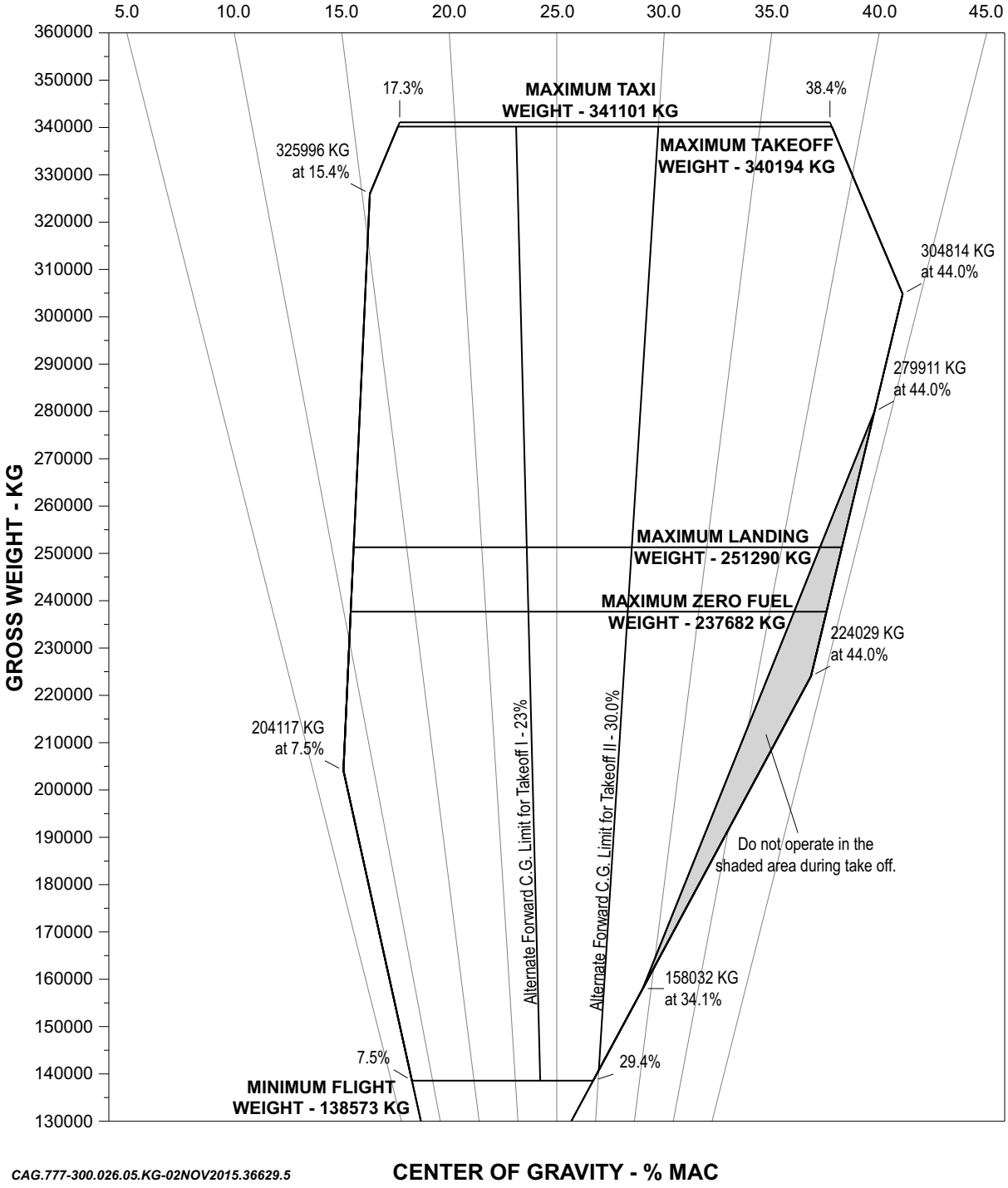

WARNING REFER TO PAGE 1 OF THIS SUBJECT FOR LIMITATIONS TO THE C.G. LIMITS.

APPLICABLE CONFIGURATIONS
A, B

BOEING PROPRIETARY
Export Controlled by ECCN 9E991

CERTIFIED WEIGHT AND CENTER OF GRAVITY LIMITS

CERTIFIED WEIGHT LIMITS - MTW 777000 LB (352441 KG)

The Maximum Certified Gross Weights and Center of Gravity Limits are shown graphically on pages 2 & 3. These Center of Gravity Limits are for taxi, takeoff, flight and landing unless otherwise specified, and are the absolute limits which must not be exceeded by the airplane center of gravity in any taxi, takeoff, flight, or landing configuration.

CERTIFIED GROSS WEIGHTS			
		LB	KG
Maximum Taxi Weight	(MTW)	777000	352441
Maximum Takeoff Weight	(MTOW)	775000	351534
Maximum Landing Weight	(MLW)	554000	251290
Maximum Zero Fuel Weight	(MZFW)	524000	237682
Minimum Flight Weight	(MFW)	305500	138573

LIMITATIONS

The following limitations must be met in order to use the certified gross weight and center of gravity limits:

- Minimum Tire Size Required
  - Nose Gear - 43X17.5R-17/32 Ply Rating
  - Main Gear - 52X21R-22/36 Ply Rating
- Minimum Wheel Size Required
  - Nose Gear - S294W5201-309 or S294W522-560
  - Main Gear - S294W5101-315 or S294W512-580
- Refer to the Airplane Maintenance Manual Section 12-15-03 for minimum tire pressure requirements.

INTERPOLATION OF CERTIFIED CENTER OF GRAVITY LIMITS

The certified weight and center of gravity limits shown in this section identify the inflection points (end points) for each weight in terms of weight and % MAC. Intermediate points between the inflection points must be determined by interpolating the weight and moment. The method of interpolation is presented in CHP-SEC 1-02-00x.

APPLICABLE CONFIGURATIONS
C

BOEING PROPRIETARY
Export Controlled by ECCN 9E991

CERTIFIED WEIGHT AND CENTER OF GRAVITY LIMITS (Continued)

C.G. LIMITS - MTW 777000 LB, MLW 554000 LB, MZFW 524000 LB

The following diagram represents the certified Center of Gravity Limits in English units:

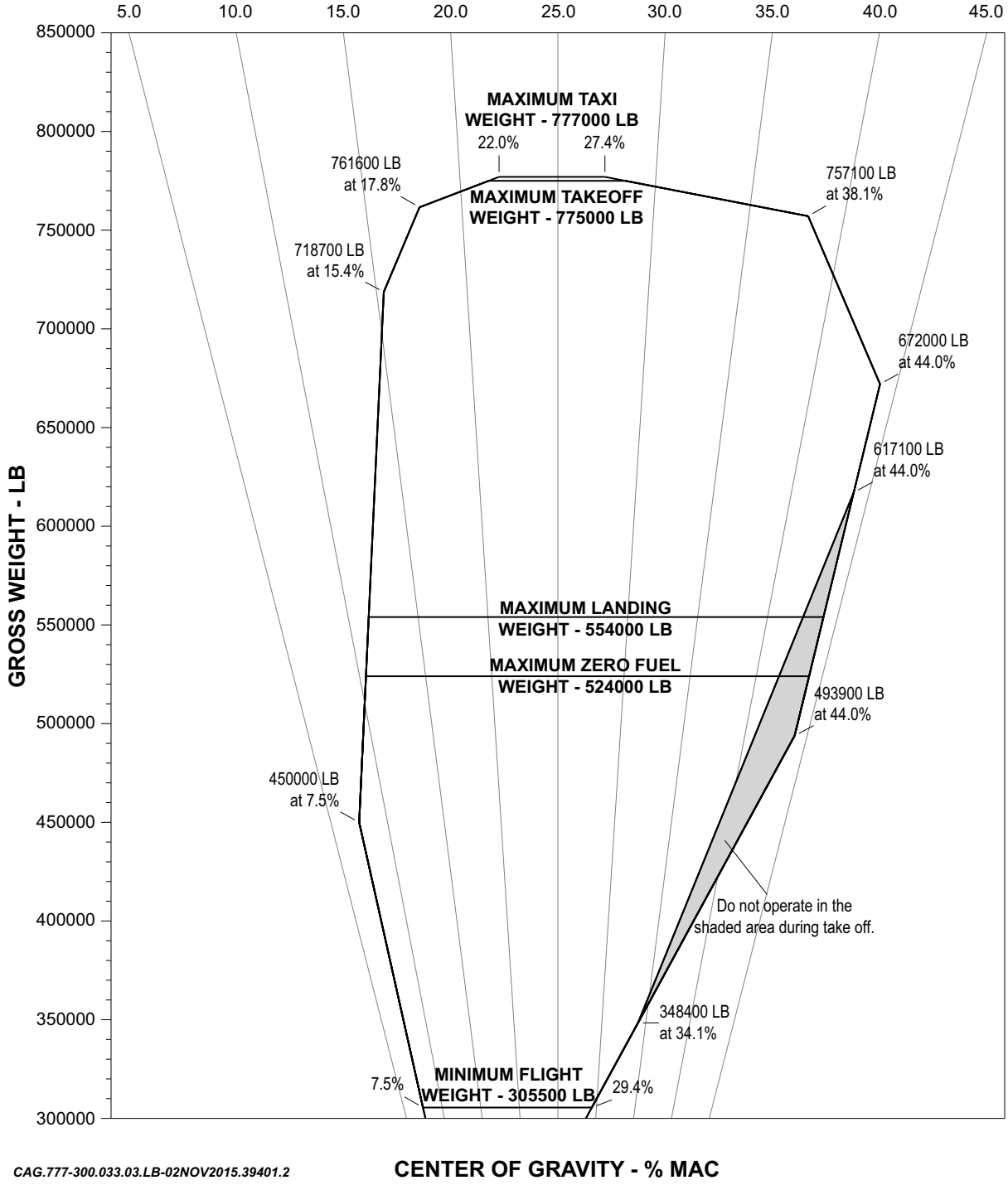

WARNING REFER TO PAGE 1 OF THIS SUBJECT FOR LIMITATIONS TO THE C.G. LIMITS.

APPLICABLE CONFIGURATIONS
C

BOEING PROPRIETARY
Export Controlled by ECCN 9E991

CERTIFIED WEIGHT AND CENTER OF GRAVITY LIMITS (Continued)

C.G. LIMITS - MTW 352441 KG, MLW 251290 KG, MZFW 237682 KG

The following diagram represents the certified Center of Gravity Limits in Metric units:

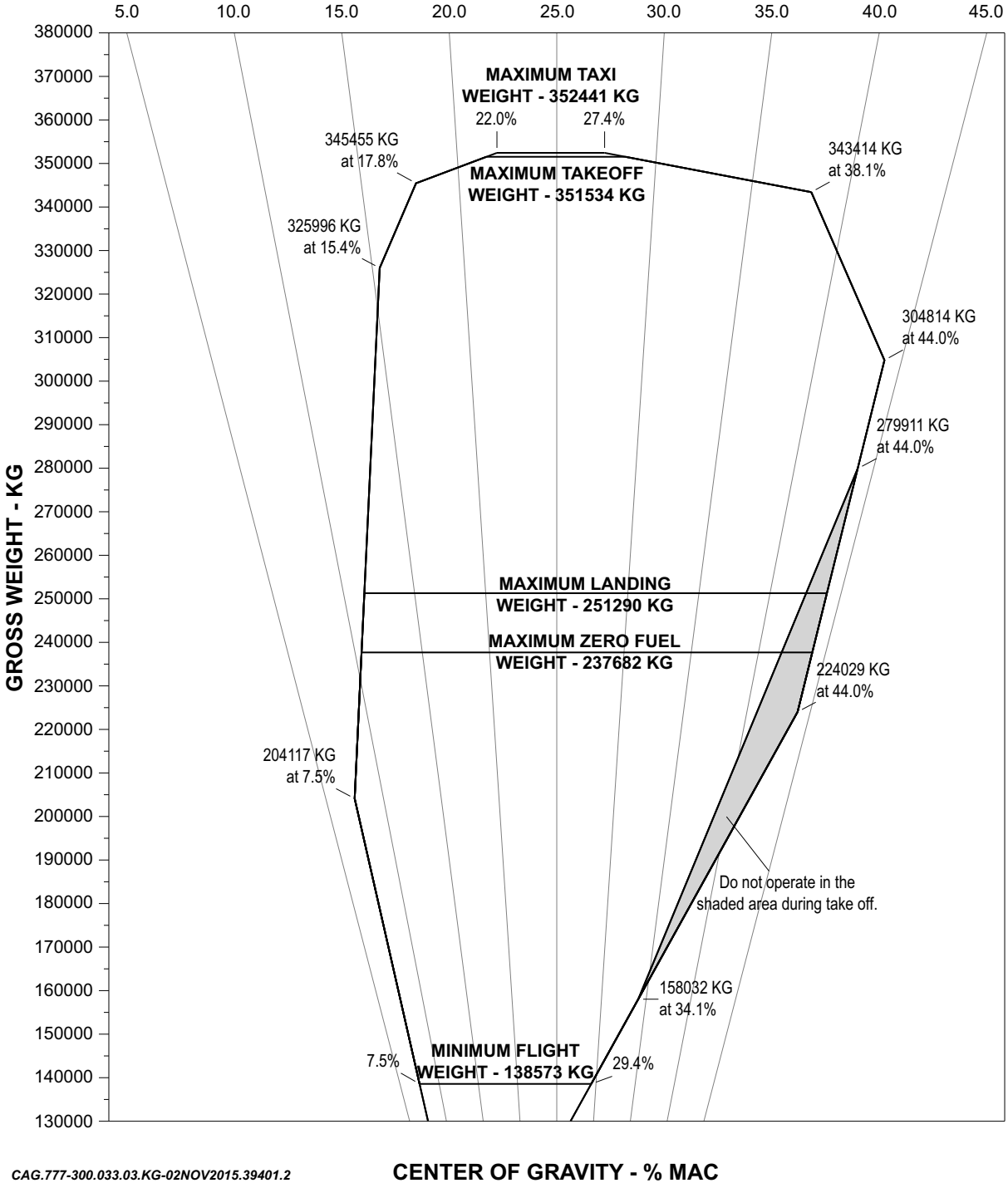

WARNING REFER TO PAGE 1 OF THIS SUBJECT FOR LIMITATIONS TO THE C.G. LIMITS.

APPLICABLE CONFIGURATIONS
C

BOEING PROPRIETARY
Export Controlled by ECCN 9E991

CERTIFIED WEIGHT AND CENTER OF GRAVITY LIMITS

CERTIFIED WEIGHT LIMITS - MTW 762000 LB (345637 KG)

The Maximum Certified Gross Weights and Center of Gravity Limits are shown graphically on pages 2 & 3. These Center of Gravity Limits are for taxi, takeoff, flight and landing unless otherwise specified, and are the absolute limits which must not be exceeded by the airplane center of gravity in any taxi, takeoff, flight, or landing configuration.

CERTIFIED GROSS WEIGHTS			
		LB	KG
Maximum Taxi Weight	(MTW)	762000	345637
Maximum Takeoff Weight	(MTOW)	760000	344730
Maximum Landing Weight	(MLW)	554000	251290
Maximum Zero Fuel Weight	(MZFW)	524000	237682
Minimum Flight Weight	(MFW)	305500	138573

LIMITATIONS

The following limitations must be met in order to use the certified gross weight and center of gravity limits:

- Minimum Tire Size Required
  - Nose Gear - 43X17.5R-17/32 Ply Rating
  - Main Gear - 52X21R-22/36 Ply Rating
- Minimum Wheel Size Required
  - Nose Gear - S294W5201-309 or S294W522-560
  - Main Gear - S294W5101-315 or S294W512-580
- Refer to the Airplane Maintenance Manual Section 12-15-03 for minimum tire pressure requirements.

INTERPOLATION OF CERTIFIED CENTER OF GRAVITY LIMITS

The certified weight and center of gravity limits shown in this section identify the inflection points (end points) for each weight in terms of weight and % MAC. Intermediate points between the inflection points must be determined by interpolating the weight and moment. The method of interpolation is presented in CHP-SEC 1-02-00x.

APPLICABLE CONFIGURATIONS
D

BOEING PROPRIETARY
Export Controlled by ECCN 9E991

CERTIFIED WEIGHT AND CENTER OF GRAVITY LIMITS (Continued)

C.G. LIMITS - MTW 762000 LB, MLW 554000 LB, MZFW 524000 LB

The following diagram represents the certified Center of Gravity Limits in English units:

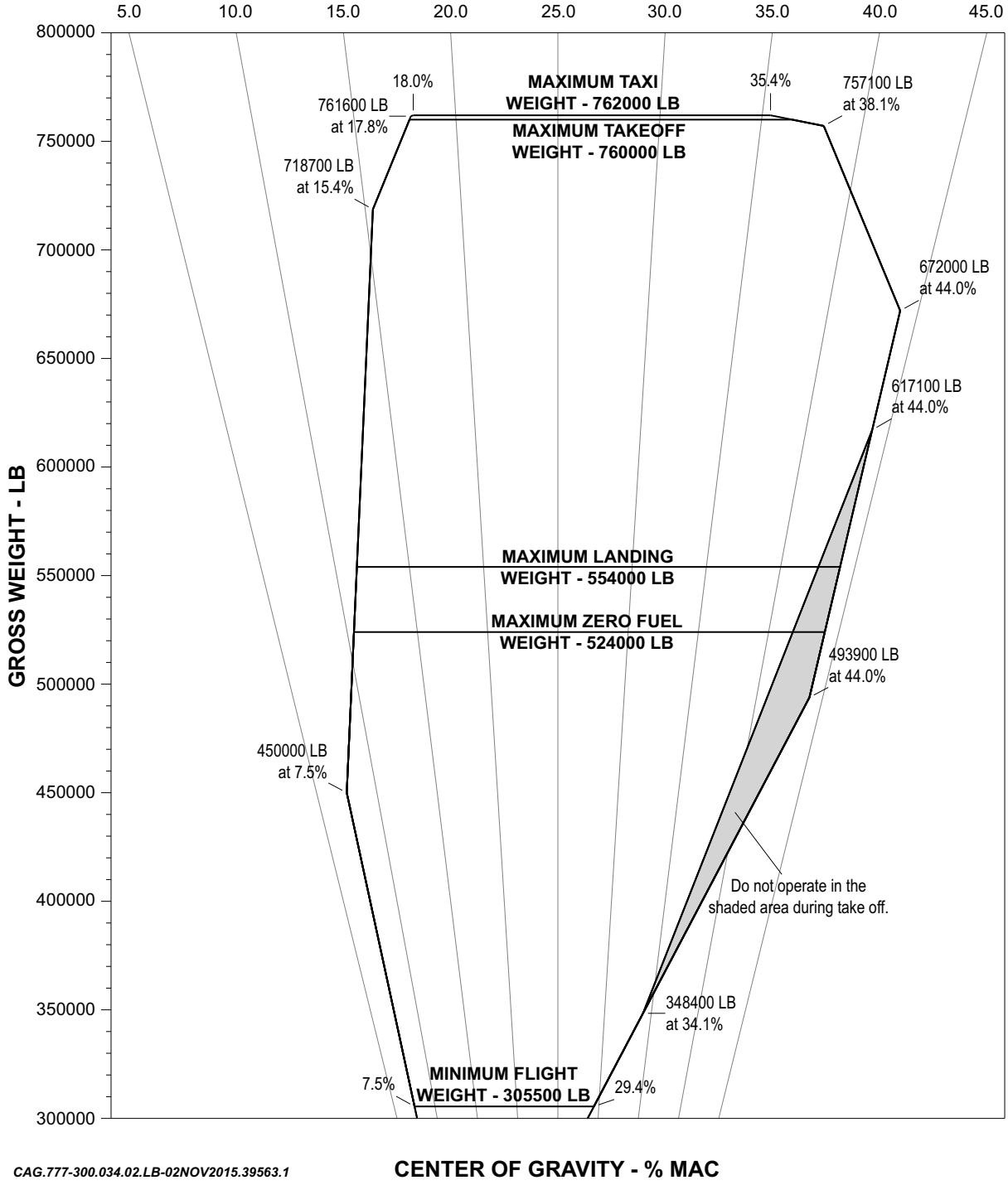

WARNING REFER TO PAGE 1 OF THIS SUBJECT FOR LIMITATIONS TO THE C.G. LIMITS.

APPLICABLE CONFIGURATIONS
D

BOEING PROPRIETARY
Export Controlled by ECCN 9E991

CERTIFIED WEIGHT AND CENTER OF GRAVITY LIMITS (Continued)

C.G. LIMITS - MTW 345637 KG, MLW 251290 KG, MZFW 237682 KG

The following diagram represents the certified Center of Gravity Limits in Metric units:

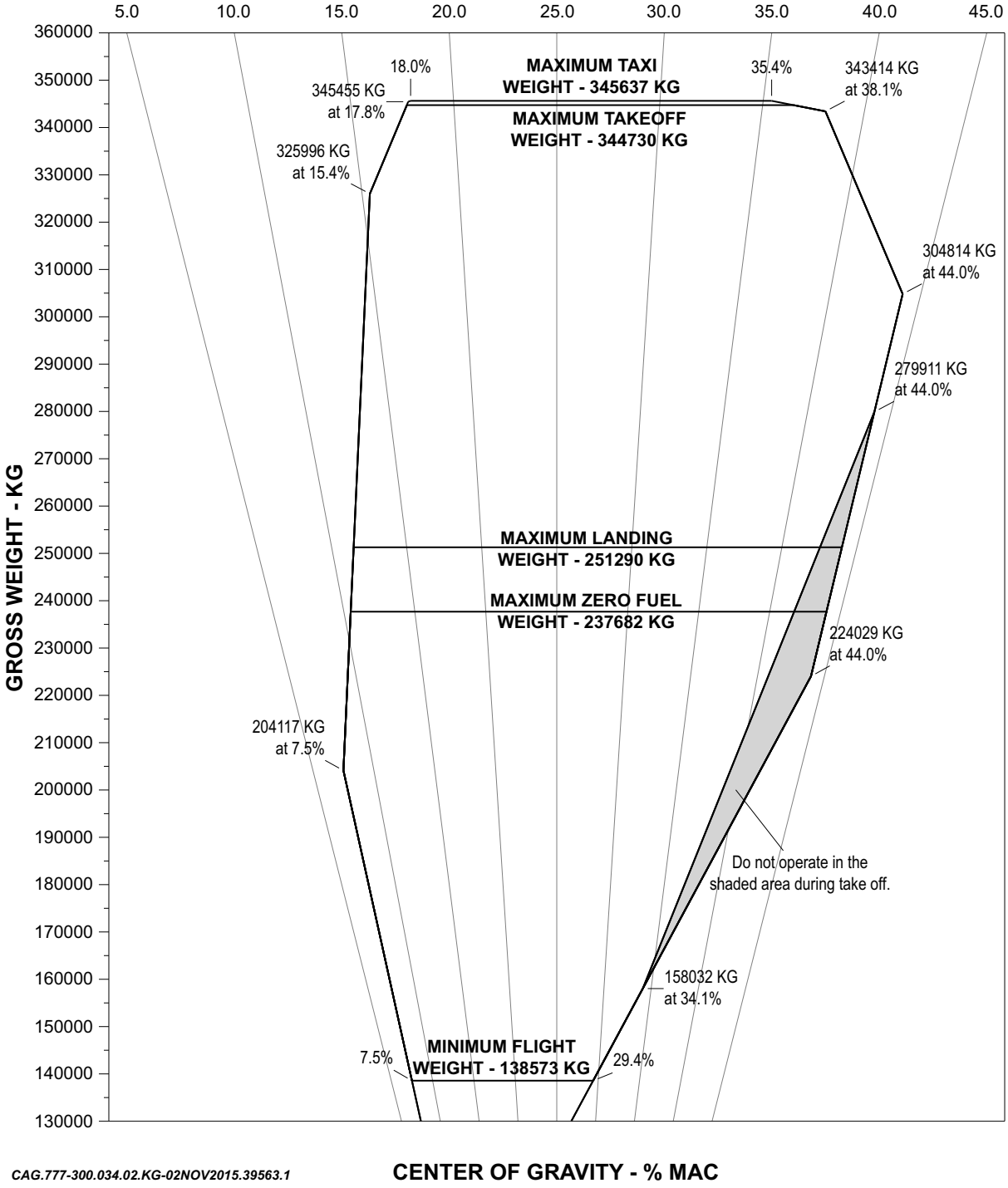

WARNING REFER TO PAGE 1 OF THIS SUBJECT FOR LIMITATIONS TO THE C.G. LIMITS.

APPLICABLE CONFIGURATIONS
D

BOEING PROPRIETARY
Export Controlled by ECCN 9E991

CERTIFIED WEIGHT AND CENTER OF GRAVITY LIMITS

CERTIFIED WEIGHT LIMITS - MTW 777000 LB (352441 KG)

The Maximum Certified Gross Weights and Center of Gravity Limits are shown graphically on pages 2 & 3. These Center of Gravity Limits are for taxi, takeoff, flight and landing unless otherwise specified, and are the absolute limits which must not be exceeded by the airplane center of gravity in any taxi, takeoff, flight, or landing configuration.

CERTIFIED GROSS WEIGHTS			
		LB	KG
Maximum Taxi Weight	(MTW)	777000	352441
Maximum Takeoff Weight	(MTOW)	775000	351534
Maximum Landing Weight	(MLW)	554000	251290
Maximum Zero Fuel Weight	(MZFW)	524000	237682
Minimum Flight Weight	(MFW)	305500	138573

LIMITATIONS

The following limitations must be met in order to use the certified gross weight and center of gravity limits:

- Minimum Tire Size Required
  - Nose Gear - 43X17.5R-17/32 Ply Rating
  - Main Gear - 52X21R-22/36 Ply Rating
- Minimum Wheel Size Required
  - Nose Gear - S294W5201-309 or S294W522-560
  - Main Gear - S294W5101-315 or S294W512-580
- Refer to the Airplane Flight Manual “Operation with Alternate Forward Center of Gravity Limit for Takeoff” for use of Alternate Forward C.G. Limits.
- Refer to the Airplane Maintenance Manual Section 12-15-03 for minimum tire pressure requirements.

INTERPOLATION OF CERTIFIED CENTER OF GRAVITY LIMITS

The certified weight and center of gravity limits shown in this section identify the inflection points (end points) for each weight in terms of weight and % MAC. Intermediate points between the inflection points must be determined by interpolating the weight and moment. The method of interpolation is presented in CHP-SEC 1-02-00x.

APPLICABLE CONFIGURATIONS
E, F

BOEING PROPRIETARY
Export Controlled by ECCN 9E991

CERTIFIED WEIGHT AND CENTER OF GRAVITY LIMITS (Continued)

C.G. LIMITS - MTW 777000 LB, MLW 554000 LB, MZFW 524000 LB

The following diagram represents the certified Center of Gravity Limits in English units:

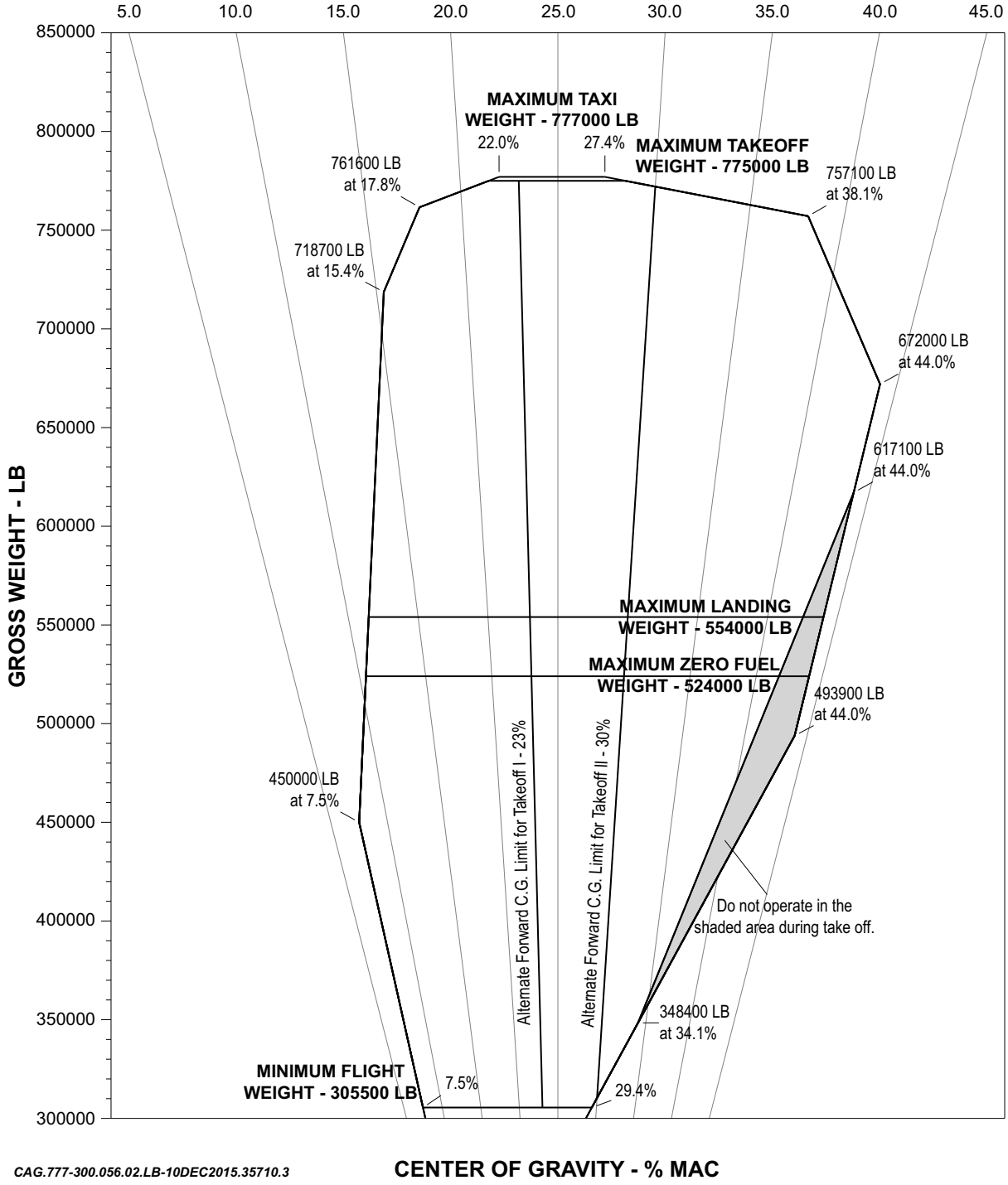

CAG.777-300.056.02.LB-10DEC2015.35710.3

WARNING REFER TO PAGE 1 OF THIS SUBJECT FOR LIMITATIONS TO THE C.G. LIMITS.

APPLICABLE CONFIGURATIONS
E, F

BOEING PROPRIETARY
Export Controlled by ECCN 9E991

CERTIFIED WEIGHT AND CENTER OF GRAVITY LIMITS (Continued)

C.G. LIMITS - MTW 352441 KG, MLW 251290 KG, MZFW 237682 KG

The following diagram represents the certified Center of Gravity Limits in Metric units:

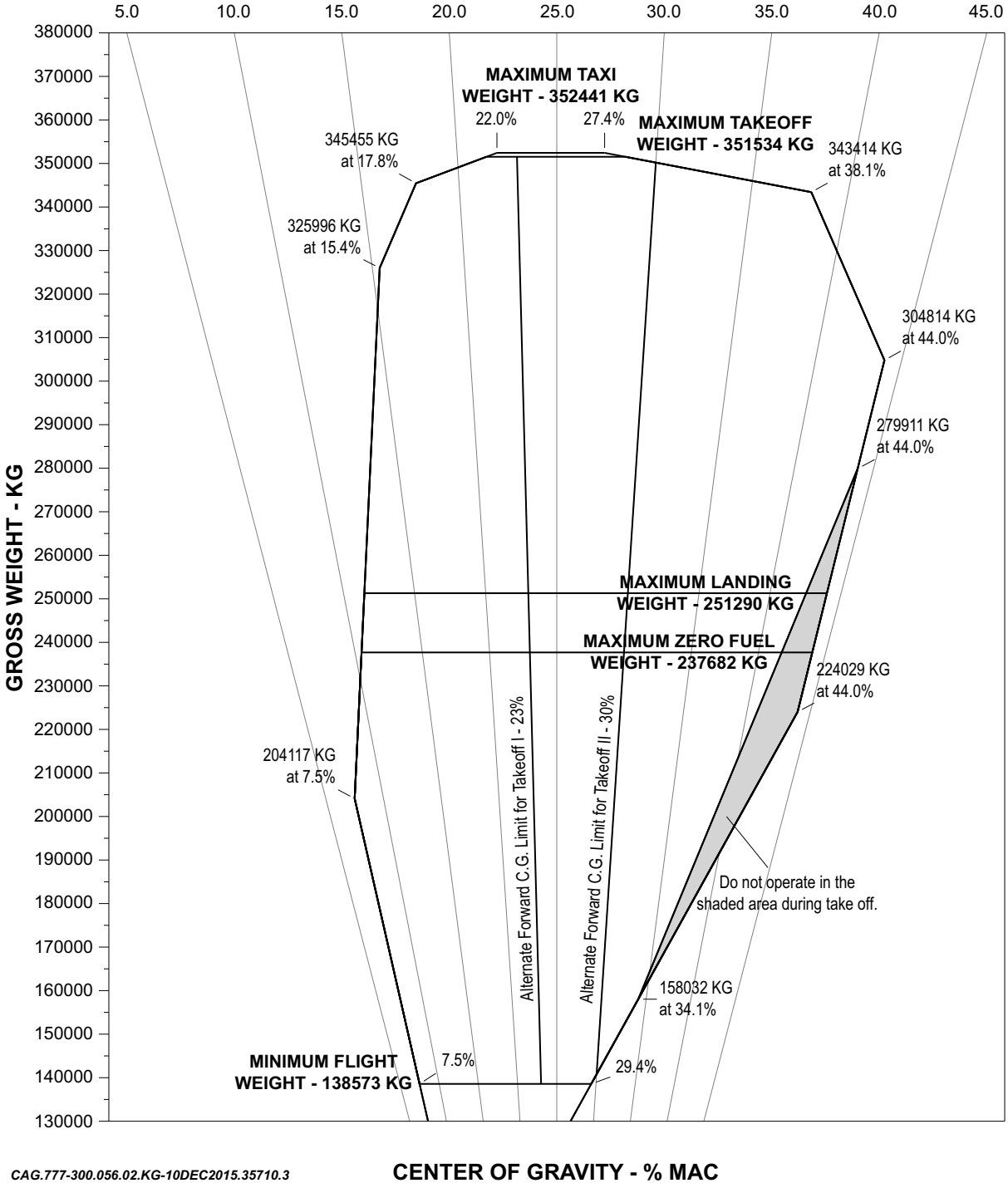

WARNING REFER TO PAGE 1 OF THIS SUBJECT FOR LIMITATIONS TO THE C.G. LIMITS.

APPLICABLE CONFIGURATIONS
E, F

BOEING PROPRIETARY
Export Controlled by ECCN 9E991

AIRPLANE LATERAL IMBALANCE LIMITS

LATERAL IMBALANCE

The airplane should be loaded symmetrically. When off center loading of payload and/or fuel does occur, the airplane can be operated if the following gross weight and lateral imbalance limits are not exceeded. The lateral balance arms of ULDs can be found in CHP-SEC 1-69-00x.

Random Imbalance is the lateral movement of the airplane center of gravity about the airplane centerline due to the loading of passengers and the attempt to symmetrically load cargo and fuel about the airplane centerline. It is expressed as a moment about the airplane centerline.

APPLICABLE CONFIGURATIONS
All

BOEING PROPRIETARY
Export Controlled by ECCN 9E991

AIRPLANE LATERAL IMBALANCE LIMITS (Continued)

LATERAL IMBALANCE LIMITATIONS (POUNDS)

The following chart presents lateral imbalance data in pounds.

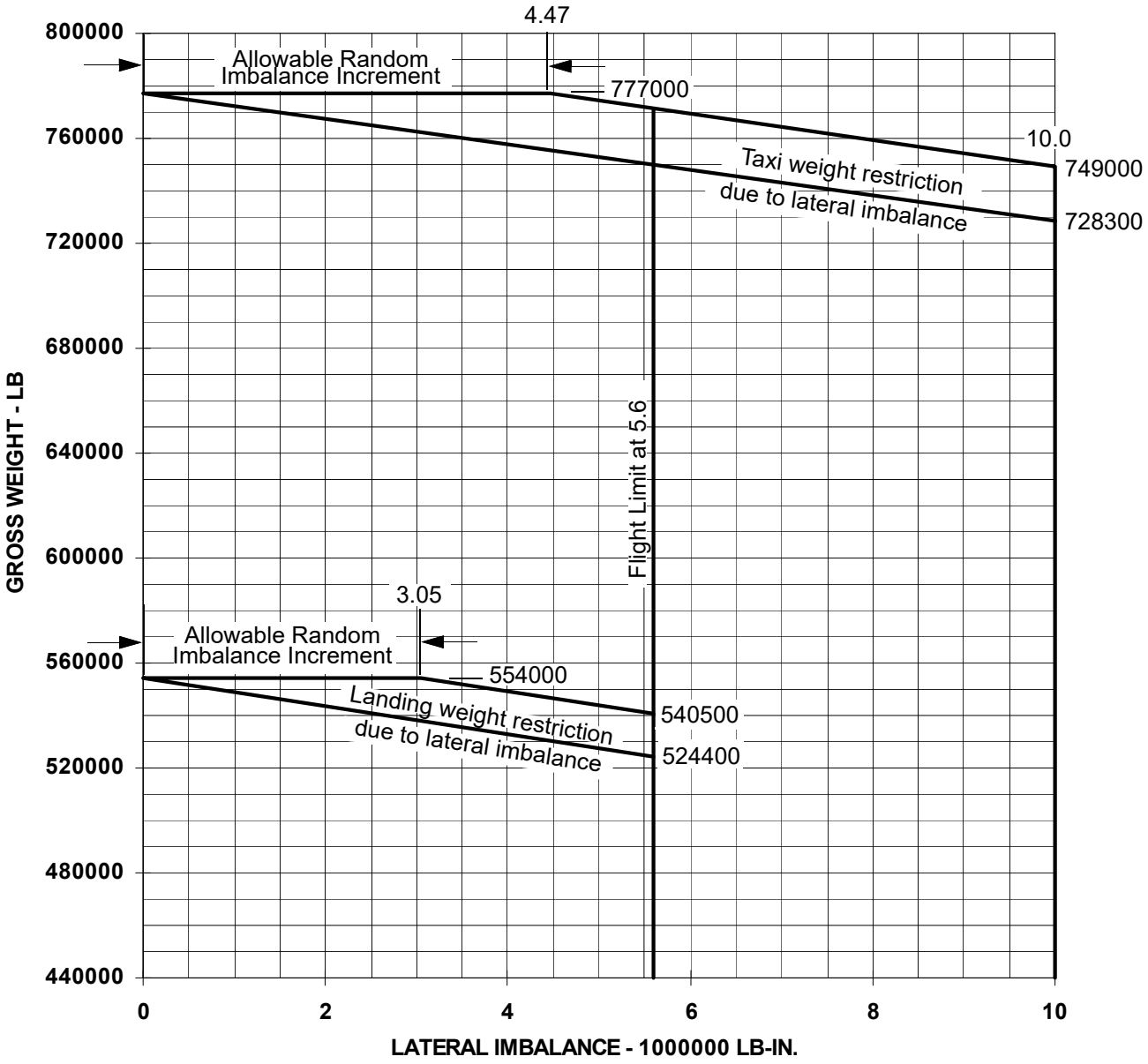

APPLICABLE CONFIGURATIONS
All

BOEING PROPRIETARY
Export Controlled by ECCN 9E991

AIRPLANE LATERAL IMBALANCE LIMITS (Continued)

LATERAL IMBALANCE LIMITATIONS (KILOGRAMS)

The following chart presents lateral imbalance data in kilograms.

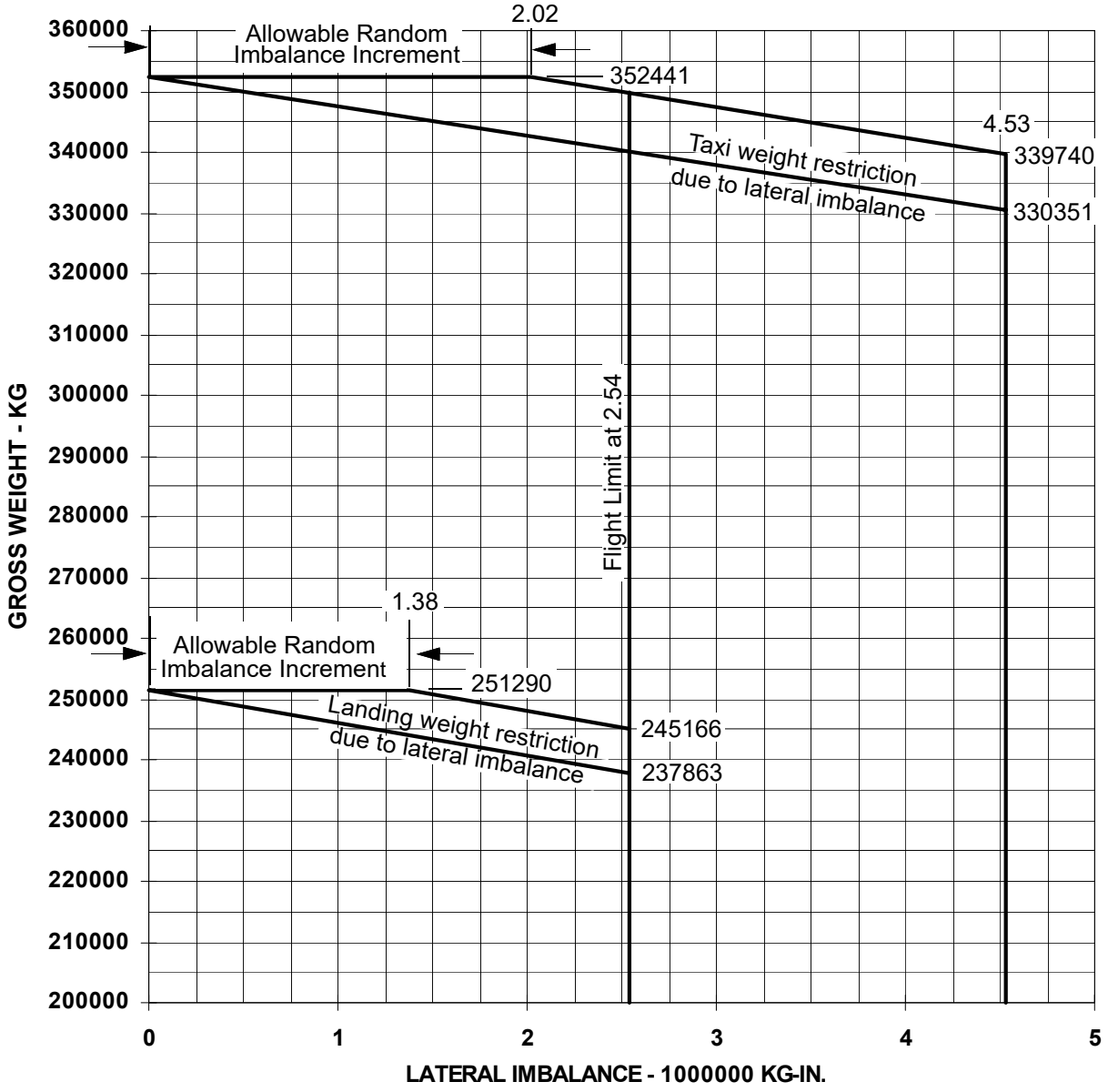

APPLICABLE CONFIGURATIONS
All

BOEING PROPRIETARY
Export Controlled by ECCN 9E991

TAKEOFF HORIZONTAL STABILIZER TRIM SETTING

GE90-115B ENGINES - ENGLISH UNITS FLAPS 5 - MULTIPLE GREEN BANDS

The following diagram provides Takeoff Trim Settings versus Airplane Center of Gravity for Flaps 5 in pounds.

Full Thrust to 15% Thrust Derate - Flaps 5

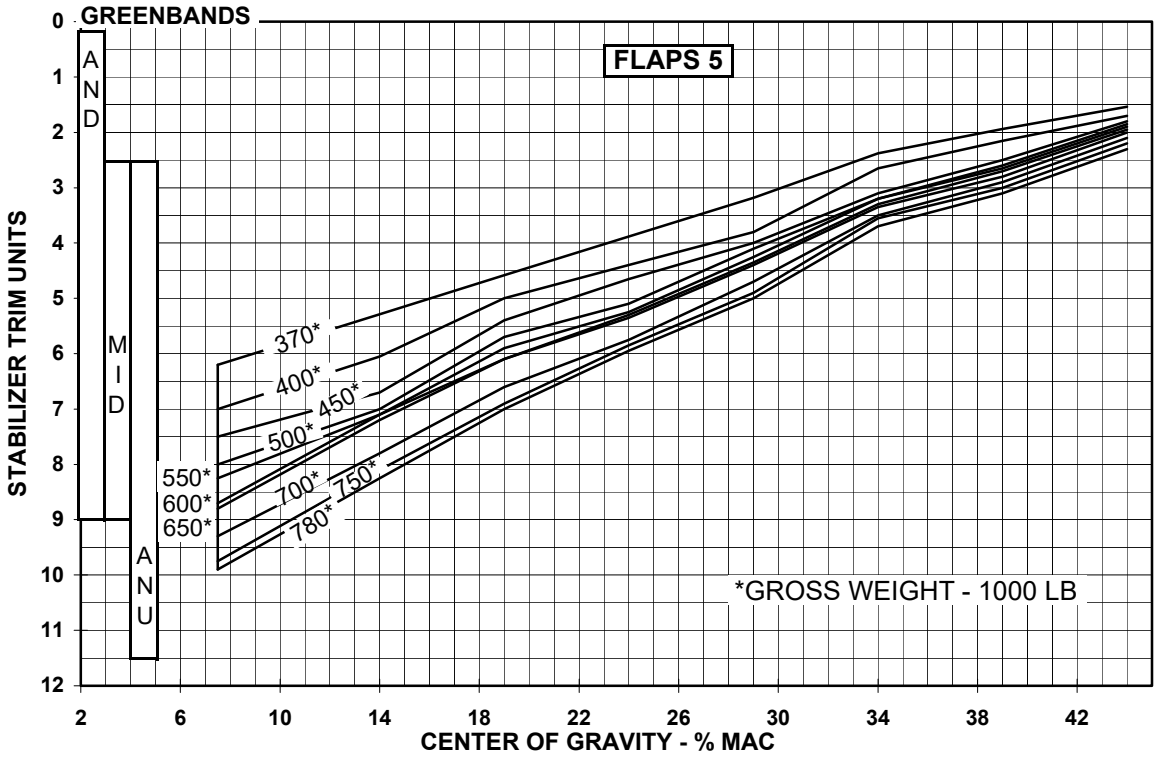

The following table provides inflection point data for the Takeoff Trim Settings versus Airplane Center of Gravity Diagram above.

TAKEOFF TRIM SETTING INFLECTION POINTS (Gross Weight - 1000 LB)																			
370		400		450		500		550		600		650		700		750		780	
C.G.	STAB TRIM	C.G.	STAB TRIM	C.G.	STAB TRIM	C.G.	STAB TRIM	C.G.	STAB TRIM	C.G.	STAB TRIM	C.G.	STAB TRIM	C.G.	STAB TRIM	C.G.	STAB TRIM	C.G.	STAB TRIM
7.5	6.20	7.5	7.00	7.5	7.50	7.5	8.00	7.5	8.25	7.5	8.70	7.5	8.80	7.5	9.30	7.5	9.75	7.5	9.90
14.0	5.29	14.0	6.05	14.0	6.70	14.0	7.00	14.0	7.10	14.0	7.10	14.0	7.20	14.0	7.80	14.0	8.10	14.0	8.25
19.0	4.58	19.0	5.00	19.0	5.40	19.0	5.70	19.0	5.90	19.0	6.10	19.0	6.10	19.0	6.60	19.0	6.90	19.0	7.00
24.0	3.88	24.0	4.40	24.0	4.65	24.0	5.10	24.0	5.25	24.0	5.30	24.0	5.35	24.0	5.75	24.0	5.85	24.0	5.95
29.0	3.18	29.0	3.80	29.0	4.00	29.0	4.10	29.0	4.25	29.0	4.35	29.0	4.40	29.0	4.70	29.0	4.90	29.0	5.00
34.0	2.38	34.0	2.65	34.0	3.10	34.0	3.20	34.0	3.20	34.0	3.30	34.0	3.35	34.0	3.50	34.0	3.55	34.0	3.70
39.0	1.94	39.0	2.15	39.0	2.50	39.0	2.60	39.0	2.65	39.0	2.70	39.0	2.80	39.0	2.90	39.0	3.00	39.0	3.10
44.0	1.54	44.0	1.70	44.0	1.80	44.0	1.85	44.0	1.90	44.0	1.95	44.0	2.00	44.0	2.10	44.0	2.20	44.0	2.30

The above values are for full rated engine thrust to 15% thrust derate. For engine thrust derate greater than 15% see page 7. For intermediate values, use linear interpolation.

APPLICABLE CONFIGURATIONS
All

BOEING PROPRIETARY
Export Controlled by ECCN 9E991

TAKEOFF HORIZONTAL STABILIZER TRIM SETTING (Continued)

GE90-115B ENGINES - METRIC UNITS FLAPS 5 - MULTIPLE GREEN BANDS

The following diagram provides Takeoff Trim Settings versus Airplane Center of Gravity for Flaps 5 in kilograms.

Full Thrust to 15% Thrust Derate - Flaps 5

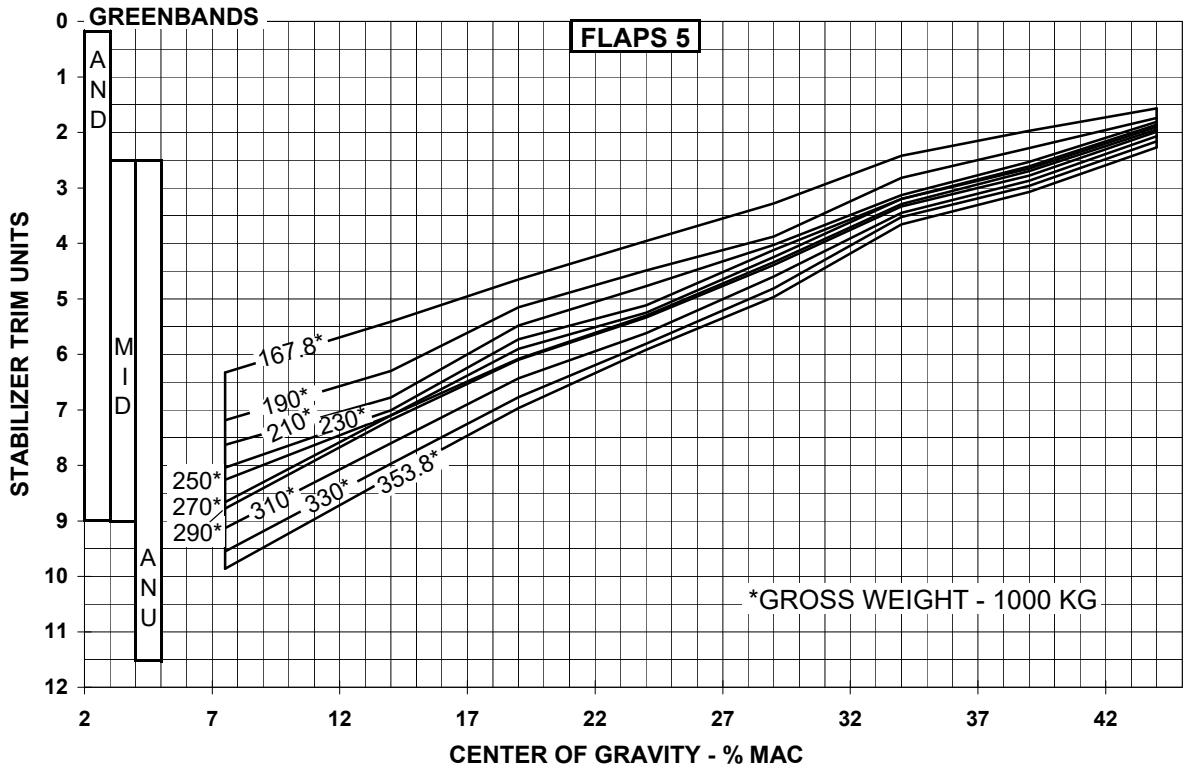

The following table provides inflection point data for the Takeoff Trim Settings versus Airplane Center of Gravity Diagram above.

TAKEOFF TRIM SETTING INFLECTION POINTS (Gross Weight - 1000 KG)																			
167.8		190		210		230		250		270		290		310		330		353.8	
C.G.	STAB TRIM	C.G.	STAB TRIM	C.G.	STAB TRIM	C.G.	STAB TRIM	C.G.	STAB TRIM	C.G.	STAB TRIM	C.G.	STAB TRIM	C.G.	STAB TRIM	C.G.	STAB TRIM	C.G.	STAB TRIM
7.5	6.20	7.5	7.19	7.5	7.63	7.5	8.04	7.5	8.26	7.5	8.66	7.5	8.78	7.5	9.13	7.5	9.55	7.5	9.90
14.0	5.29	14.0	6.30	14.0	6.78	14.0	7.01	14.0	7.10	14.0	7.10	14.0	7.18	14.0	7.60	14.0	7.97	14.0	8.25
19.0	4.58	19.0	5.15	19.0	5.48	19.0	5.73	19.0	5.90	19.0	6.08	19.0	6.10	19.0	6.43	19.0	6.77	19.0	7.00
24.0	3.88	24.0	4.49	24.0	4.77	24.0	5.12	24.0	5.25	24.0	5.30	24.0	5.34	24.0	5.62	24.0	5.81	24.0	5.95
29.0	3.18	29.0	3.88	29.0	4.03	29.0	4.12	29.0	4.25	29.0	4.34	29.0	4.39	29.0	4.60	29.0	4.81	29.0	5.00
34.0	2.38	34.0	2.82	34.0	3.13	34.0	3.20	34.0	3.20	34.0	3.29	34.0	3.34	34.0	3.45	34.0	3.53	34.0	3.70
39.0	1.94	39.0	2.28	39.0	2.53	39.0	2.61	39.0	2.65	39.0	2.70	39.0	2.78	39.0	2.87	39.0	2.96	39.0	3.10
44.0	1.54	44.0	1.74	44.0	1.81	44.0	1.86	44.0	1.90	44.0	1.95	44.0	1.99	44.0	2.07	44.0	2.16	44.0	2.30

The above values are for full rated engine thrust to 15% thrust derate. For engine thrust derate greater than 15% see page 8. For intermediate values, use linear interpolation.

APPLICABLE CONFIGURATIONS
All

BOEING PROPRIETARY
Export Controlled by ECCN 9E991

TAKEOFF HORIZONTAL STABILIZER TRIM SETTING (Continued)

GE90-115B ENGINES - ENGLISH UNITS FLAPS 15 - MULTIPLE GREEN BANDS

The following diagram provides Takeoff Trim Settings versus Airplane Center of Gravity for Flaps 15 in pounds.

Full Thrust to 15% Thrust Derate - Flaps 15

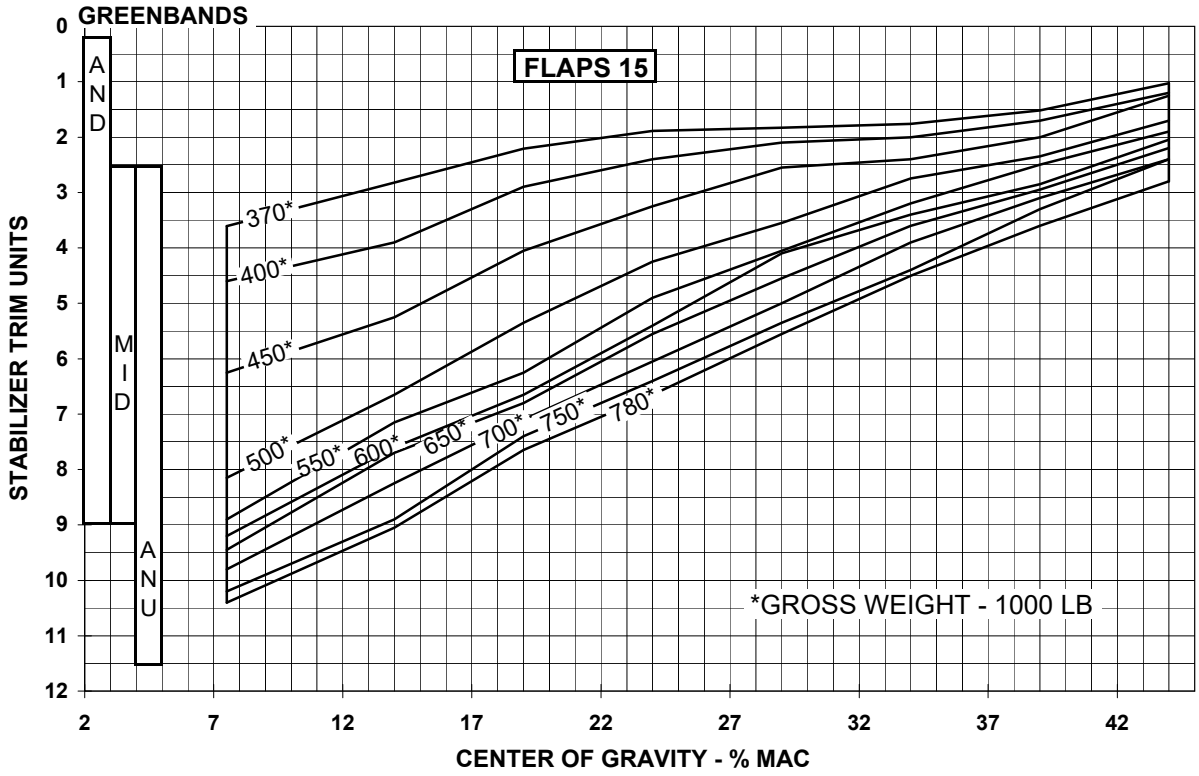

The following table provides inflection point data for the Takeoff Trim Settings versus Airplane Center of Gravity Diagram above.

TAKEOFF TRIM SETTING INFLECTION POINTS (Gross Weight - 1000 LB)																			
370		400		450		500		550		600		650		700		750		780	
C.G.	STAB TRIM	C.G.	STAB TRIM	C.G.	STAB TRIM	C.G.	STAB TRIM	C.G.	STAB TRIM	C.G.	STAB TRIM	C.G.	STAB TRIM	C.G.	STAB TRIM	C.G.	STAB TRIM	C.G.	STAB TRIM
7.5	3.61	7.5	4.60	7.5	6.25	7.5	8.15	7.5	8.90	7.5	9.20	7.5	9.45	7.5	9.80	7.5	10.20	7.5	10.40
14.0	2.82	14.0	3.90	14.0	5.25	14.0	6.65	14.0	7.15	14.0	7.60	14.0	7.70	14.0	8.25	14.0	8.90	14.0	9.05
19.0	2.21	19.0	2.90	19.0	4.05	19.0	5.35	19.0	6.25	19.0	6.65	19.0	6.80	19.0	7.10	19.0	7.40	19.0	7.65
24.0	1.89	24.0	2.40	24.0	3.25	24.0	4.25	24.0	4.90	24.0	5.40	24.0	5.55	24.0	6.05	24.0	6.40	24.0	6.65
29.0	1.83	29.0	2.10	29.0	2.55	29.0	3.55	29.0	4.05	29.0	4.10	29.0	4.55	29.0	5.00	29.0	5.35	29.0	5.55
34.0	1.76	34.0	2.00	34.0	2.40	34.0	2.75	34.0	3.20	34.0	3.40	34.0	3.60	34.0	3.90	34.0	4.40	34.0	4.50
39.0	1.52	39.0	1.70	39.0	2.00	39.0	2.35	39.0	2.50	39.0	2.85	39.0	2.95	39.0	3.10	39.0	3.30	39.0	3.60
44.0	1.03	44.0	1.20	44.0	1.25	44.0	1.70	44.0	1.90	44.0	2.05	44.0	2.20	44.0	2.40	44.0	2.40	44.0	2.80

The above values are for full rated engine thrust to 15% thrust derate. For engine thrust derate greater than 15% see page 9. For intermediate values, use linear interpolation.

APPLICABLE CONFIGURATIONS
All

BOEING PROPRIETARY
Export Controlled by ECCN 9E991

TAKEOFF HORIZONTAL STABILIZER TRIM SETTING (Continued)

GE90-115B ENGINES - METRIC UNITS FLAPS 15 - MULTIPLE GREEN BANDS

The following diagram provides Takeoff Trim Settings versus Airplane Center of Gravity for Flaps 15 in kilograms.

Full Thrust to 15% Thrust Derate - Flaps 15

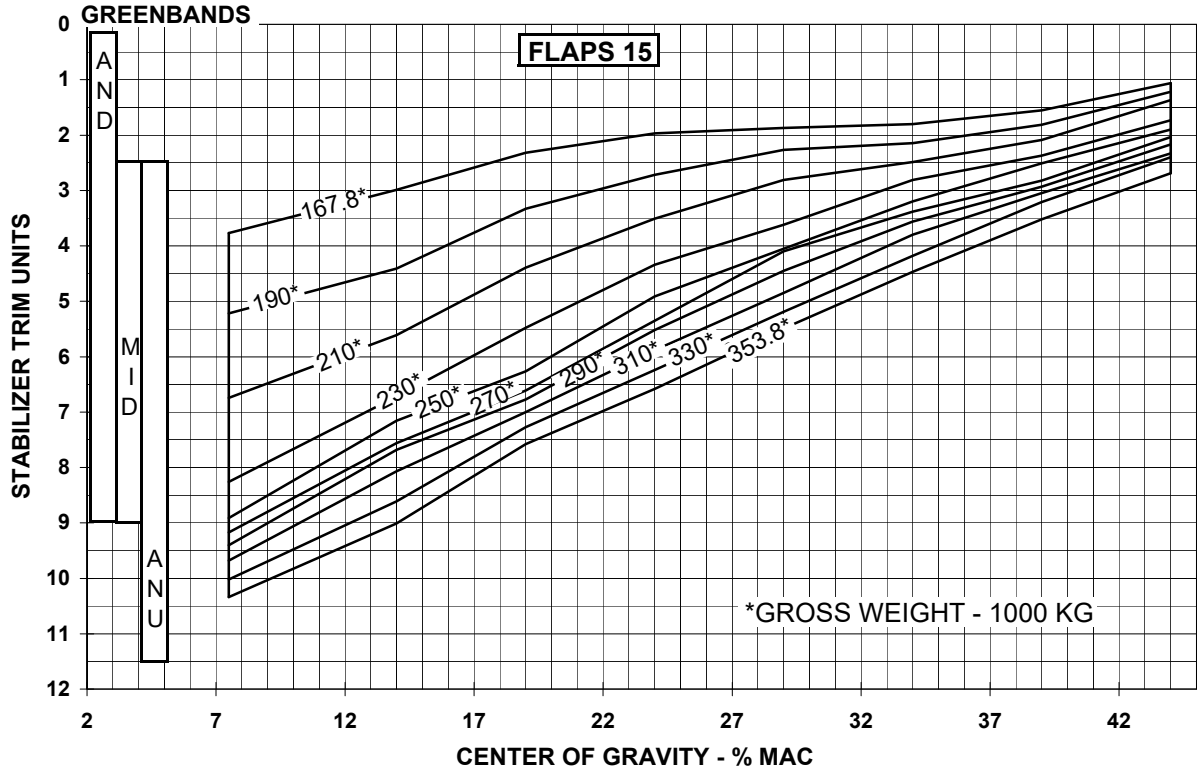

The following table provides inflection point data for the Takeoff Trim Settings versus Airplane Center of Gravity Diagram above.

TAKEOFF TRIM SETTING INFLECTION POINTS (Gross Weight - 1000 KG)																			
167.8		190		210		230		250		270		290		310		330		353.8	
C.G.	STAB TRIM	C.G.	STAB TRIM	C.G.	STAB TRIM	C.G.	STAB TRIM	C.G.	STAB TRIM	C.G.	STAB TRIM	C.G.	STAB TRIM	C.G.	STAB TRIM	C.G.	STAB TRIM	C.G.	STAB TRIM
7.5	3.61	7.5	5.22	7.5	6.74	7.5	8.26	7.5	8.91	7.5	9.17	7.5	9.40	7.5	9.68	7.5	10.02	7.5	10.40
14.0	2.82	14.0	4.41	14.0	5.61	14.0	6.72	14.0	7.16	14.0	7.56	14.0	7.68	14.0	8.07	14.0	8.61	14.0	9.05
19.0	2.21	19.0	3.33	19.0	4.39	19.0	5.48	19.0	6.26	19.0	6.61	19.0	6.77	19.0	7.00	19.0	7.27	19.0	7.65
24.0	1.89	24.0	2.72	24.0	3.51	24.0	4.34	24.0	4.91	24.0	5.35	24.0	5.52	24.0	5.88	24.0	6.24	24.0	6.65
29.0	1.83	29.0	2.27	29.0	2.81	29.0	3.62	29.0	4.05	29.0	4.10	29.0	4.45	29.0	4.85	29.0	5.19	29.0	5.55
34.0	1.76	34.0	2.15	34.0	2.49	34.0	2.81	34.0	3.20	34.0	3.38	34.0	3.56	34.0	3.80	34.0	4.18	34.0	4.50
39.0	1.52	39.0	1.81	39.0	2.09	39.0	2.37	39.0	2.51	39.0	2.82	39.0	2.93	39.0	3.05	39.0	3.21	39.0	3.60
44.0	1.03	44.0	1.22	44.0	1.37	44.0	1.73	44.0	1.90	44.0	2.04	44.0	2.17	44.0	2.33	44.0	2.40	44.0	2.80

The above values are for full rated engine thrust to 15% thrust derate. For engine thrust derate greater than 15% see page 10. For intermediate values, use linear interpolation.

APPLICABLE CONFIGURATIONS
All

BOEING PROPRIETARY
Export Controlled by ECCN 9E991

TAKEOFF HORIZONTAL STABILIZER TRIM SETTING (Continued)

GE90-115B ENGINES - ENGLISH UNITS FLAPS 20 - MULTIPLE GREEN BANDS

The following diagram provides Takeoff Trim Settings versus Airplane Center of Gravity for Flaps 20 in pounds.

Full Thrust to 15% Thrust Derate - Flaps 20

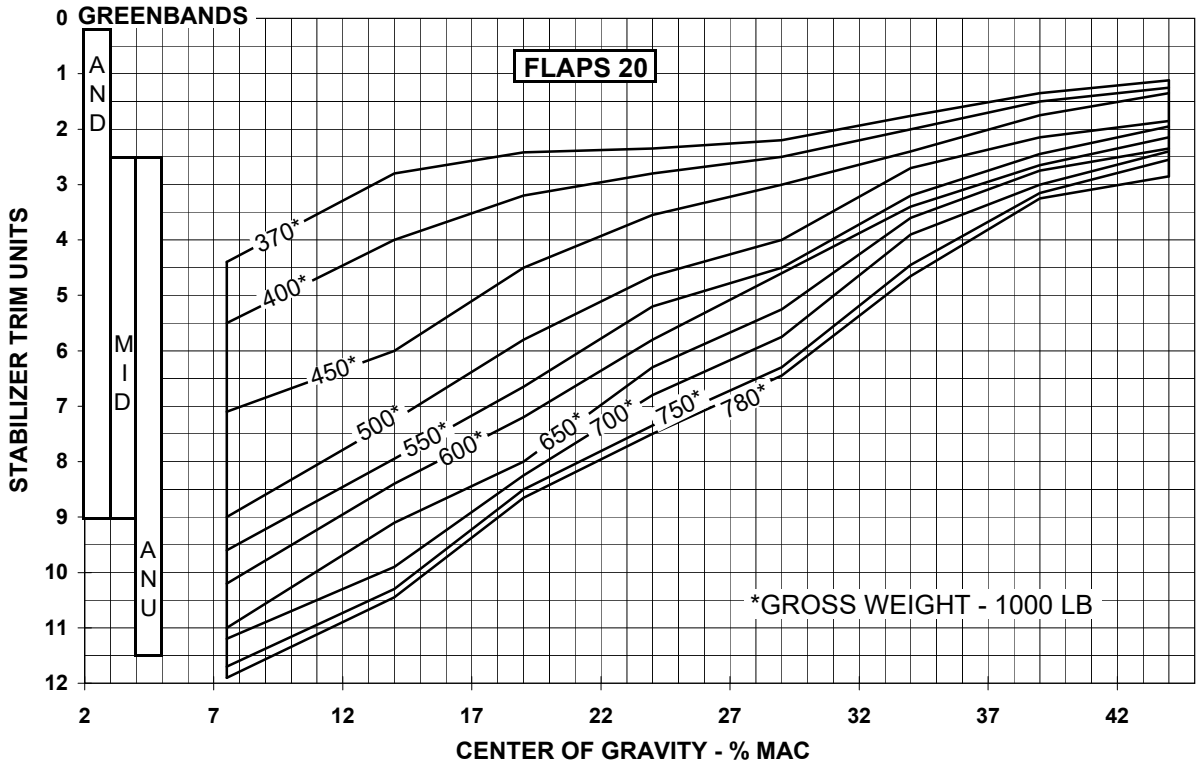

The following table provides inflection point data for the Takeoff Trim Settings versus Airplane Center of Gravity Diagram above.

TAKEOFF TRIM SETTING INFLECTION POINTS (Gross Weight - 1000 LB)																			
370		400		450		500		550		600		650		700		750		780	
C.G.	STAB TRIM	C.G.	STAB TRIM	C.G.	STAB TRIM	C.G.	STAB TRIM	C.G.	STAB TRIM	C.G.	STAB TRIM	C.G.	STAB TRIM	C.G.	STAB TRIM	C.G.	STAB TRIM	C.G.	STAB TRIM
7.5	4.40	7.5	5.50	7.5	7.10	7.5	9.00	7.5	9.60	7.5	10.20	7.5	11.00	7.5	11.20	7.5	11.70	7.5	11.90
14.0	2.80	14.0	4.00	14.0	6.00	14.0	7.25	14.0	7.95	14.0	8.40	14.0	9.10	14.0	9.90	14.0	10.30	14.0	10.45
19.0	2.42	19.0	3.20	19.0	4.50	19.0	5.80	19.0	6.65	19.0	7.20	19.0	8.00	19.0	8.25	19.0	8.50	19.0	8.65
24.0	2.35	24.0	2.80	24.0	3.55	24.0	4.65	24.0	5.20	24.0	5.80	24.0	6.30	24.0	6.80	24.0	7.35	24.0	7.50
29.0	2.20	29.0	2.50	29.0	3.00	29.0	4.00	29.0	4.50	29.0	4.60	29.0	5.25	29.0	5.75	29.0	6.30	29.0	6.45
34.0	1.76	34.0	2.00	34.0	2.40	34.0	2.70	34.0	3.20	34.0	3.40	34.0	3.60	34.0	3.90	34.0	4.45	34.0	4.65
39.0	1.35	39.0	1.50	39.0	1.75	39.0	2.15	39.0	2.45	39.0	2.65	39.0	2.75	39.0	3.00	39.0	3.15	39.0	3.25
44.0	1.12	44.0	1.25	44.0	1.35	44.0	1.85	44.0	1.95	44.0	2.15	44.0	2.35	44.0	2.40	44.0	2.55	44.0	2.85

The above values are for full rated engine thrust to 15% thrust derate. For engine thrust derate greater than 15% see page 11. For intermediate values, use linear interpolation.

APPLICABLE CONFIGURATIONS
All

BOEING PROPRIETARY
Export Controlled by ECCN 9E991

TAKEOFF HORIZONTAL STABILIZER TRIM SETTING (Continued)

GE90-115B ENGINES - METRIC UNITS FLAPS 20 - MULTIPLE GREEN BANDS

The following diagram provides Takeoff Trim Settings versus Airplane Center of Gravity for Flaps 20 in kilograms.

Full Thrust to 15% Thrust Derate - Flaps 20

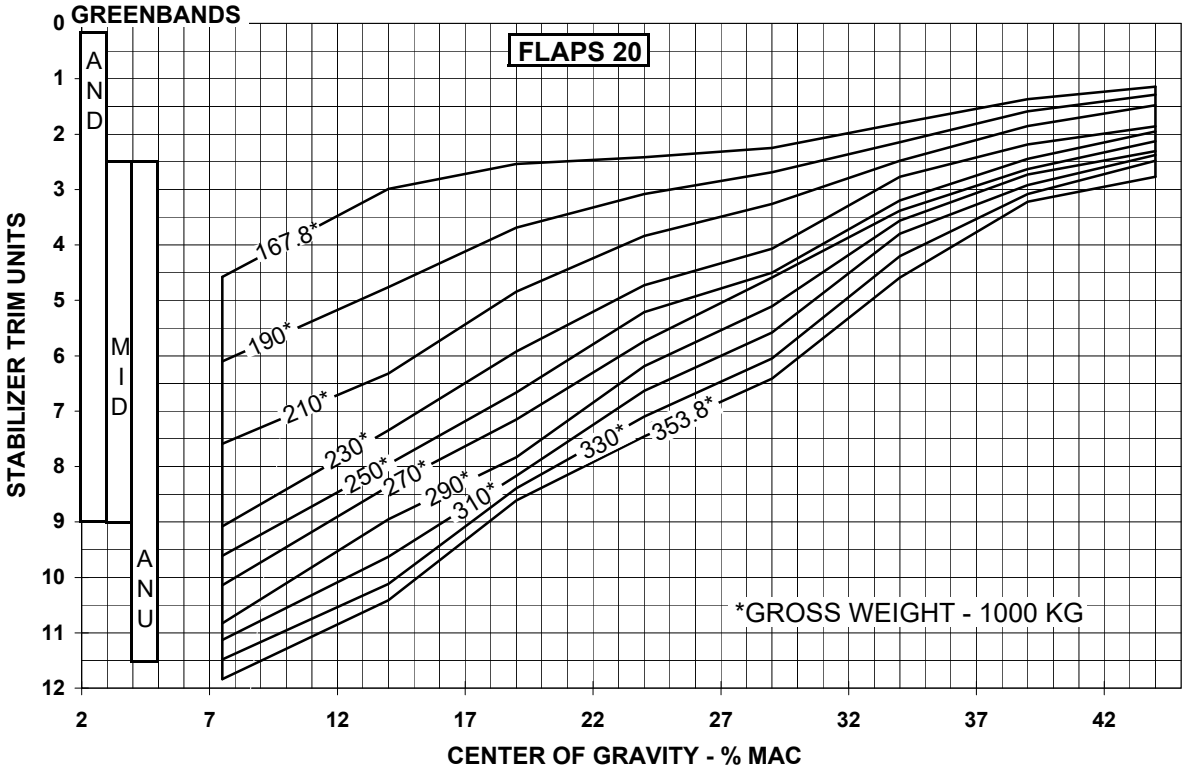

The following table provides inflection point data for the Takeoff Trim Settings versus Airplane Center of Gravity Diagram above.

TAKEOFF TRIM SETTING INFLECTION POINTS (Gross Weight - 1000 KG)																			
167.8		190		210		230		250		270		290		310		330		353.8	
C.G.	STAB TRIM	C.G.	STAB TRIM	C.G.	STAB TRIM	C.G.	STAB TRIM	C.G.	STAB TRIM	C.G.	STAB TRIM	C.G.	STAB TRIM	C.G.	STAB TRIM	C.G.	STAB TRIM	C.G.	STAB TRIM
7.5	4.40	7.5	6.10	7.5	7.59	7.5	9.08	7.5	9.61	7.5	10.14	7.5	10.83	7.5	11.13	7.5	11.48	7.5	11.90
14.0	2.80	14.0	4.76	14.0	6.32	14.0	7.35	14.0	7.96	14.0	8.36	14.0	8.95	14.0	9.63	14.0	10.12	14.0	10.45
19.0	2.42	19.0	3.69	19.0	4.84	19.0	5.92	19.0	6.66	19.0	7.15	19.0	7.83	19.0	8.17	19.0	8.39	19.0	8.65
24.0	2.35	24.0	3.08	24.0	3.84	24.0	4.73	24.0	5.21	24.0	5.74	24.0	6.19	24.0	6.63	24.0	7.10	24.0	7.50
29.0	2.20	29.0	2.69	29.0	3.26	29.0	4.07	29.0	4.50	29.0	4.59	29.0	5.11	29.0	5.58	29.0	6.05	29.0	6.45
34.0	1.76	34.0	2.15	34.0	2.48	34.0	2.77	34.0	3.20	34.0	3.38	34.0	3.56	34.0	3.80	34.0	4.20	34.0	4.65
39.0	1.35	39.0	1.59	39.0	1.85	39.0	2.19	39.0	2.45	39.0	2.63	39.0	2.73	39.0	2.92	39.0	3.08	39.0	3.25
44.0	1.12	44.0	1.29	44.0	1.48	44.0	1.86	44.0	1.95	44.0	2.13	44.0	2.31	44.0	2.38	44.0	2.48	44.0	2.85

The above values are for full rated engine thrust to 15% thrust derate. For engine thrust derate greater than 15% see page 12. For intermediate values, use linear interpolation.

APPLICABLE CONFIGURATIONS
All

BOEING PROPRIETARY
Export Controlled by ECCN 9E991

TAKEOFF HORIZONTAL STABILIZER TRIM SETTING (Continued)

GE90-115B ENGINES - ENGLISH UNITS FLAPS 5 - MULTIPLE GREEN BANDS

The following diagram provides Takeoff Trim Settings versus Airplane Center of Gravity for Flaps 5 in pounds.

Thrust Derate Greater than 15% - Flaps 5

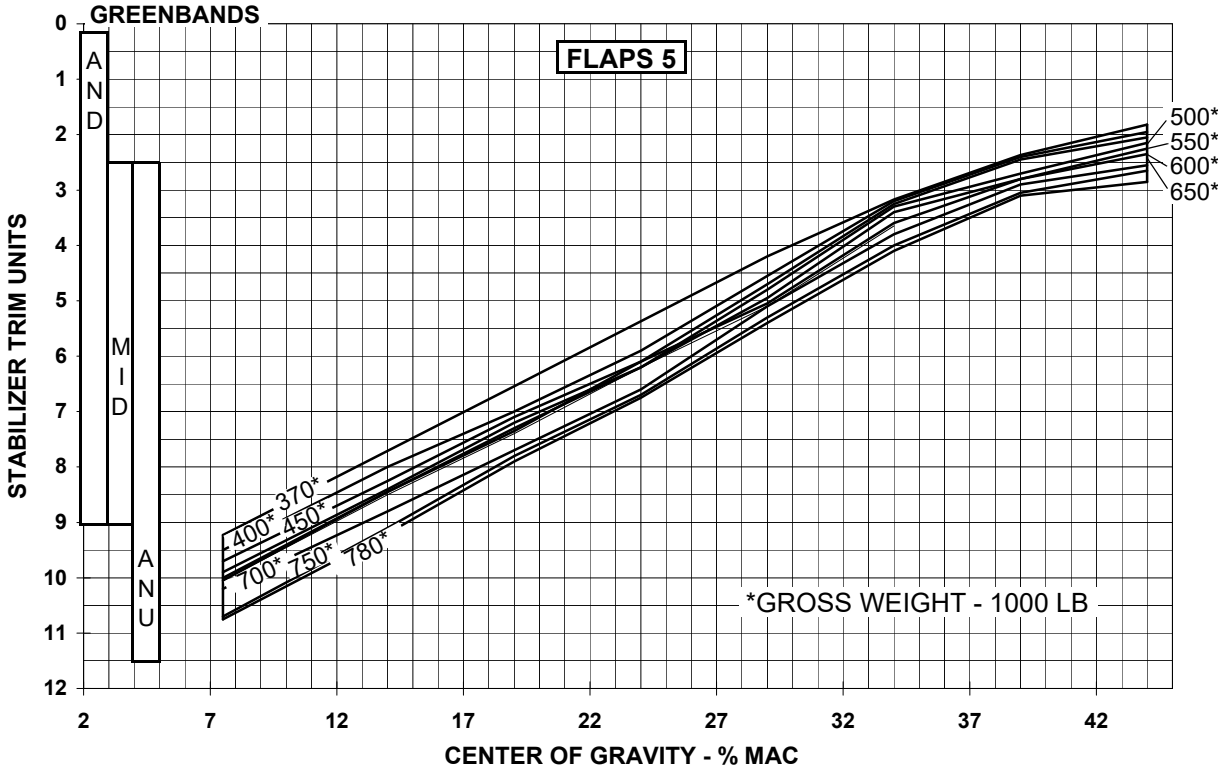

The following table provides inflection point data for the Takeoff Trim Settings versus Airplane Center of Gravity Diagram above.

TAKEOFF TRIM SETTING INFLECTION POINTS (Gross Weight - 1000 LB)																			
370		400		450		500		550		600		650		700		750		780	
C.G.	STAB TRIM	C.G.	STAB TRIM	C.G.	STAB TRIM	C.G.	STAB TRIM	C.G.	STAB TRIM	C.G.	STAB TRIM	C.G.	STAB TRIM	C.G.	STAB TRIM	C.G.	STAB TRIM	C.G.	STAB TRIM
7.5	9.23	7.5	9.50	7.5	9.70	7.5	9.90	7.5	10.00	7.5	10.05	7.5	10.05	7.5	10.20	7.5	10.70	7.5	10.75
14.0	7.71	14.0	8.00	14.0	8.25	14.0	8.40	14.0	8.45	14.0	8.45	14.0	8.50	14.0	8.80	14.0	9.10	14.0	9.20
19.0	6.54	19.0	7.00	19.0	7.10	19.0	7.20	19.0	7.30	19.0	7.35	19.0	7.40	19.0	7.70	19.0	7.80	19.0	7.90
24.0	5.37	24.0	5.90	24.0	6.10	24.0	6.20	24.0	6.20	24.0	6.10	24.0	6.20	24.0	6.60	24.0	6.70	24.0	6.75
29.0	4.20	29.0	4.55	29.0	4.70	29.0	4.80	29.0	4.95	29.0	5.05	29.0	5.10	29.0	5.10	29.0	5.30	29.0	5.40
34.0	3.17	34.0	3.20	34.0	3.25	34.0	3.30	34.0	3.40	34.0	3.60	34.0	3.65	34.0	3.80	34.0	4.00	34.0	4.10
39.0	2.37	39.0	2.40	39.0	2.45	39.0	2.70	39.0	2.80	39.0	2.80	39.0	2.80	39.0	2.90	39.0	3.05	39.0	3.10
44.0	1.82	44.0	1.95	44.0	2.05	44.0	2.15	44.0	2.25	44.0	2.35	44.0	2.40	44.0	2.55	44.0	2.65	44.0	2.85

APPLICABLE CONFIGURATIONS
All

BOEING PROPRIETARY
Export Controlled by ECCN 9E991

TAKEOFF HORIZONTAL STABILIZER TRIM SETTING (Continued)

GE90-115B ENGINES - METRIC UNITS FLAPS 5 - MULTIPLE GREEN BANDS

The following diagram provides Takeoff Trim Settings versus Airplane Center of Gravity for Flaps 5 in kilograms.

Thrust Derate Greater than 15% - Flaps 5

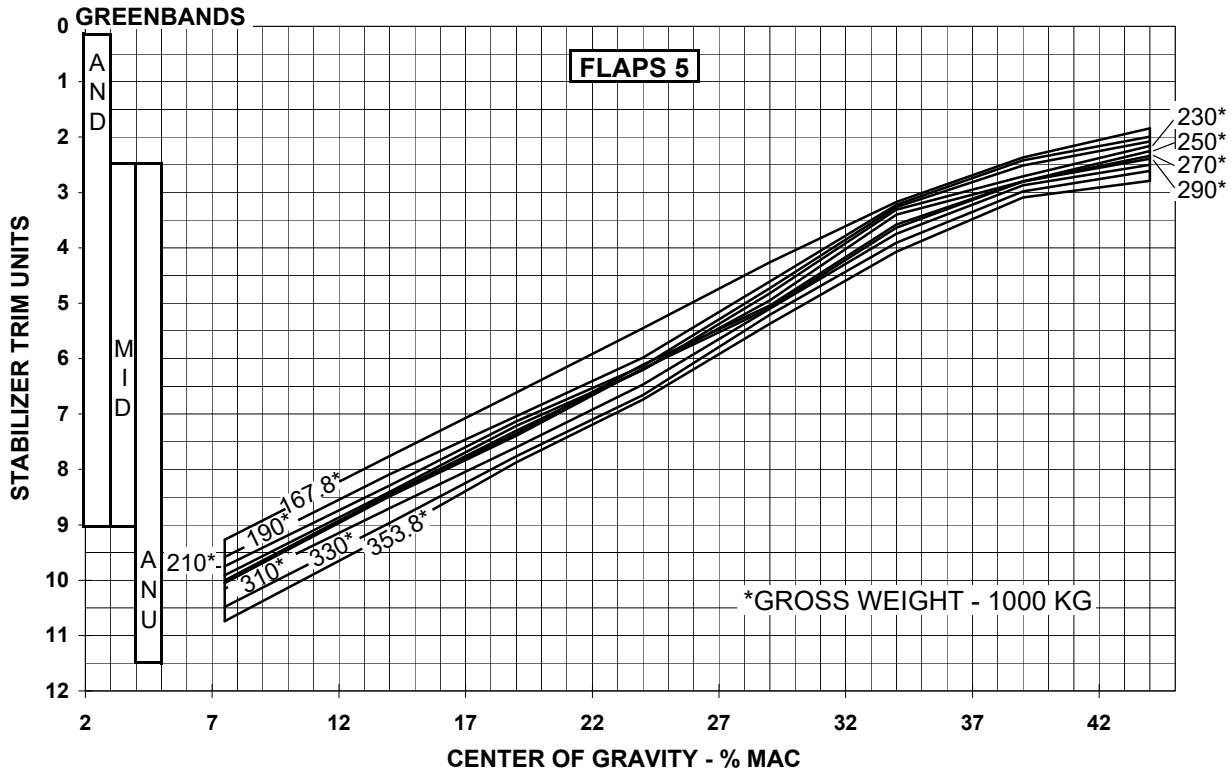

The following table provides inflection point data for the Takeoff Trim Settings versus Airplane Center of Gravity Diagram above.

TAKEOFF TRIM SETTING INFLECTION POINTS (Gross Weight - 1000 KG)																			
167.8		190		210		230		250		270		290		310		330		353.8	
C.G.	STAB TRIM	C.G.	STAB TRIM	C.G.	STAB TRIM	C.G.	STAB TRIM	C.G.	STAB TRIM	C.G.	STAB TRIM	C.G.	STAB TRIM	C.G.	STAB TRIM	C.G.	STAB TRIM	C.G.	STAB TRIM
7.5	9.23	7.5	9.58	7.5	9.75	7.5	9.91	7.5	10.00	7.5	10.05	7.5	10.05	7.5	10.15	7.5	10.48	7.5	10.75
14.0	7.71	14.0	8.09	14.0	8.29	14.0	8.41	14.0	8.45	14.0	8.45	14.0	8.49	14.0	8.70	14.0	8.97	14.0	9.20
19.0	6.54	19.0	7.04	19.0	7.13	19.0	7.21	19.0	7.30	19.0	7.35	19.0	7.39	19.0	7.60	19.0	7.76	19.0	7.90
24.0	5.37	24.0	5.98	24.0	6.13	24.0	6.20	24.0	6.20	24.0	6.11	24.0	6.18	24.0	6.47	24.0	6.66	24.0	6.75
29.0	4.20	29.0	4.61	29.0	4.73	29.0	4.82	29.0	4.95	29.0	5.04	29.0	5.09	29.0	5.10	29.0	5.21	29.0	5.40
34.0	3.17	34.0	3.22	34.0	3.26	34.0	3.31	34.0	3.40	34.0	3.58	34.0	3.64	34.0	3.75	34.0	3.91	34.0	4.10
39.0	2.37	39.0	2.42	39.0	2.51	39.0	2.71	39.0	2.80	39.0	2.80	39.0	2.80	39.0	2.87	39.0	2.98	39.0	3.10
44.0	1.82	44.0	1.99	44.0	2.08	44.0	2.16	44.0	2.25	44.0	2.34	44.0	2.39	44.0	2.50	44.0	2.61	44.0	2.85

APPLICABLE CONFIGURATIONS
All

BOEING PROPRIETARY
Export Controlled by ECCN 9E991

TAKEOFF HORIZONTAL STABILIZER TRIM SETTING (Continued)

GE90-115B ENGINES - ENGLISH UNITS FLAPS 15 - MULTIPLE GREEN BANDS

The following diagram provides Takeoff Trim Settings versus Airplane Center of Gravity for Flaps 15 in pounds.

Thrust Derate Greater than 15% - Flaps 15

The following table provides inflection point data for the Takeoff Trim Settings versus Airplane Center of Gravity Diagram above.

TAKEOFF TRIM SETTING INFLECTION POINTS (Gross Weight - 1000 LB)																			
370		400		450		500		550		600		650		700		750		780	
C.G.	STAB TRIM	C.G.	STAB TRIM	C.G.	STAB TRIM	C.G.	STAB TRIM	C.G.	STAB TRIM	C.G.	STAB TRIM	C.G.	STAB TRIM	C.G.	STAB TRIM	C.G.	STAB TRIM	C.G.	STAB TRIM
7.5	6.89	7.5	7.40	7.5	8.80	7.5	9.80	7.5	10.50	7.5	10.90	7.5	11.05	7.5	11.45	7.5	11.60	7.5	11.75
14.0	5.59	14.0	6.00	14.0	7.70	14.0	8.50	14.0	9.05	14.0	9.60	14.0	9.65	14.0	10.15	14.0	10.60	14.0	10.70
19.0	4.60	19.0	5.25	19.0	6.85	19.0	7.55	19.0	7.95	19.0	8.50	19.0	9.10	19.0	9.40	19.0	9.70	19.0	9.80
24.0	3.60	24.0	4.10	24.0	5.40	24.0	6.40	24.0	6.70	24.0	7.20	24.0	7.45	24.0	8.25	24.0	8.60	24.0	8.85
29.0	2.76	29.0	3.29	29.0	4.40	29.0	5.10	29.0	5.45	29.0	6.15	29.0	6.65	29.0	7.10	29.0	7.15	29.0	7.30
34.0	2.27	34.0	2.60	34.0	3.15	34.0	3.60	34.0	4.05	34.0	4.60	34.0	4.85	34.0	5.20	34.0	5.50	34.0	5.75
39.0	1.99	39.0	2.30	39.0	2.50	39.0	2.95	39.0	3.25	39.0	3.50	39.0	3.60	39.0	4.05	39.0	4.35	39.0	4.70
44.0	1.70	44.0	1.85	44.0	2.20	44.0	2.50	44.0	2.65	44.0	2.80	44.0	2.90	44.0	2.95	44.0	3.00	44.0	3.30

APPLICABLE CONFIGURATIONS
All

BOEING PROPRIETARY
Export Controlled by ECCN 9E991

TAKEOFF HORIZONTAL STABILIZER TRIM SETTING (Continued)

GE90-115B ENGINES - METRIC UNITS FLAPS 15 - MULTIPLE GREEN BANDS

The following diagram provides Takeoff Trim Settings versus Airplane Center of Gravity for Flaps 15 in kilograms.

Thrust Derate Greater than 15% - Flaps 15

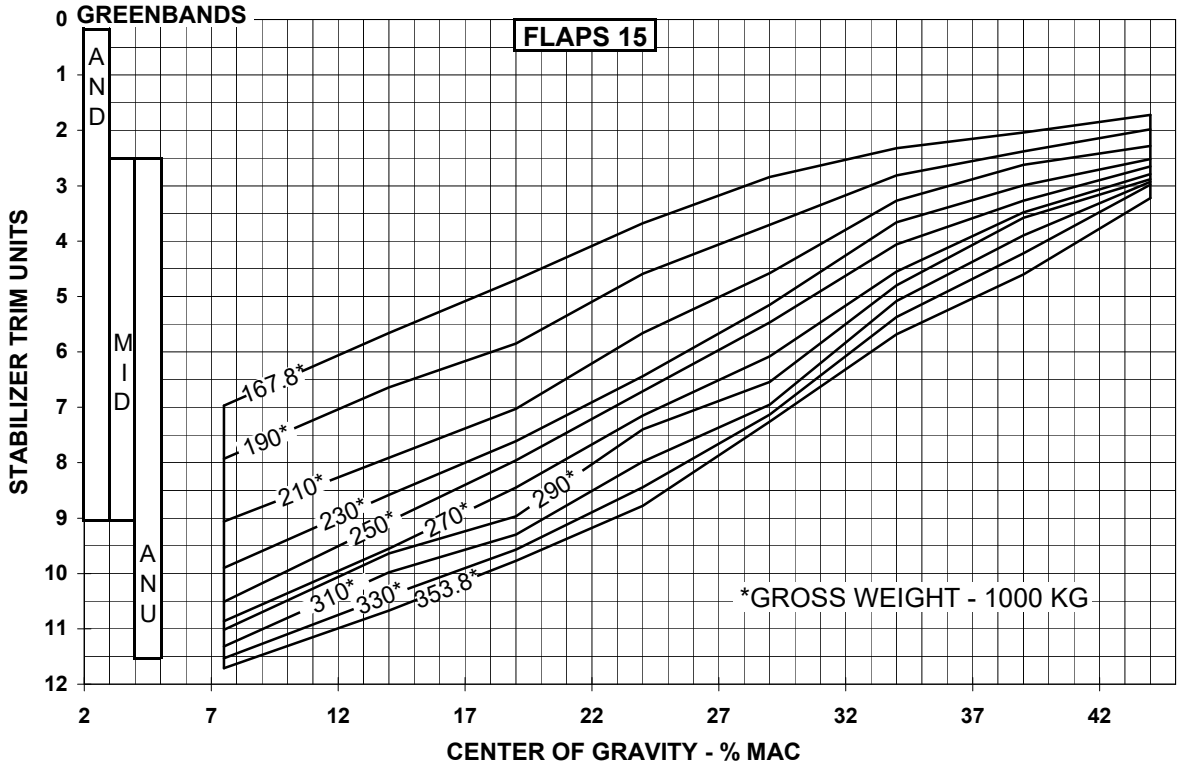

The following table provides inflection point data for the Takeoff Trim Settings versus Airplane Center of Gravity Diagram above.

TAKEOFF TRIM SETTING INFLECTION POINTS (Gross Weight - 1000 KG)																			
167.8		190		210		230		250		270		290		310		330		353.8	
C.G.	STAB TRIM	C.G.	STAB TRIM	C.G.	STAB TRIM	C.G.	STAB TRIM	C.G.	STAB TRIM	C.G.	STAB TRIM	C.G.	STAB TRIM	C.G.	STAB TRIM	C.G.	STAB TRIM	C.G.	STAB TRIM
7.5	6.89	7.5	7.93	7.5	9.06	7.5	9.90	7.5	10.51	7.5	10.86	7.5	11.02	7.5	11.32	7.5	11.53	7.5	11.75
14.0	5.59	14.0	6.64	14.0	7.91	14.0	8.58	14.0	9.06	14.0	9.55	14.0	9.64	14.0	9.98	14.0	10.40	14.0	10.70
19.0	4.60	19.0	5.85	19.0	7.03	19.0	7.61	19.0	7.96	19.0	8.45	19.0	8.97	19.0	9.30	19.0	9.57	19.0	9.80
24.0	3.60	24.0	4.59	24.0	5.66	24.0	6.44	24.0	6.71	24.0	7.15	24.0	7.40	24.0	7.98	24.0	8.44	24.0	8.85
29.0	2.76	29.0	3.71	29.0	4.58	29.0	5.15	29.0	5.47	29.0	6.08	29.0	6.54	29.0	6.95	29.0	7.13	29.0	7.30
34.0	2.27	34.0	2.81	34.0	3.27	34.0	3.66	34.0	4.06	34.0	4.55	34.0	4.80	34.0	5.08	34.0	5.37	34.0	5.75
39.0	1.99	39.0	2.38	39.0	2.62	39.0	2.99	39.0	3.27	39.0	3.48	39.0	3.58	39.0	3.90	39.0	4.22	39.0	4.70
44.0	1.70	44.0	1.98	44.0	2.28	44.0	2.52	44.0	2.65	44.0	2.79	44.0	2.88	44.0	2.93	44.0	2.98	44.0	3.30

APPLICABLE CONFIGURATIONS
All

BOEING PROPRIETARY
Export Controlled by ECCN 9E991

TAKEOFF HORIZONTAL STABILIZER TRIM SETTING (Continued)

GE90-115B ENGINES - ENGLISH UNITS FLAPS 20 - MULTIPLE GREEN BANDS

The following diagram provides Takeoff Trim Settings versus Airplane Center of Gravity for Flaps 20 in pounds.

Thrust Derate Greater than 15% - Flaps 20

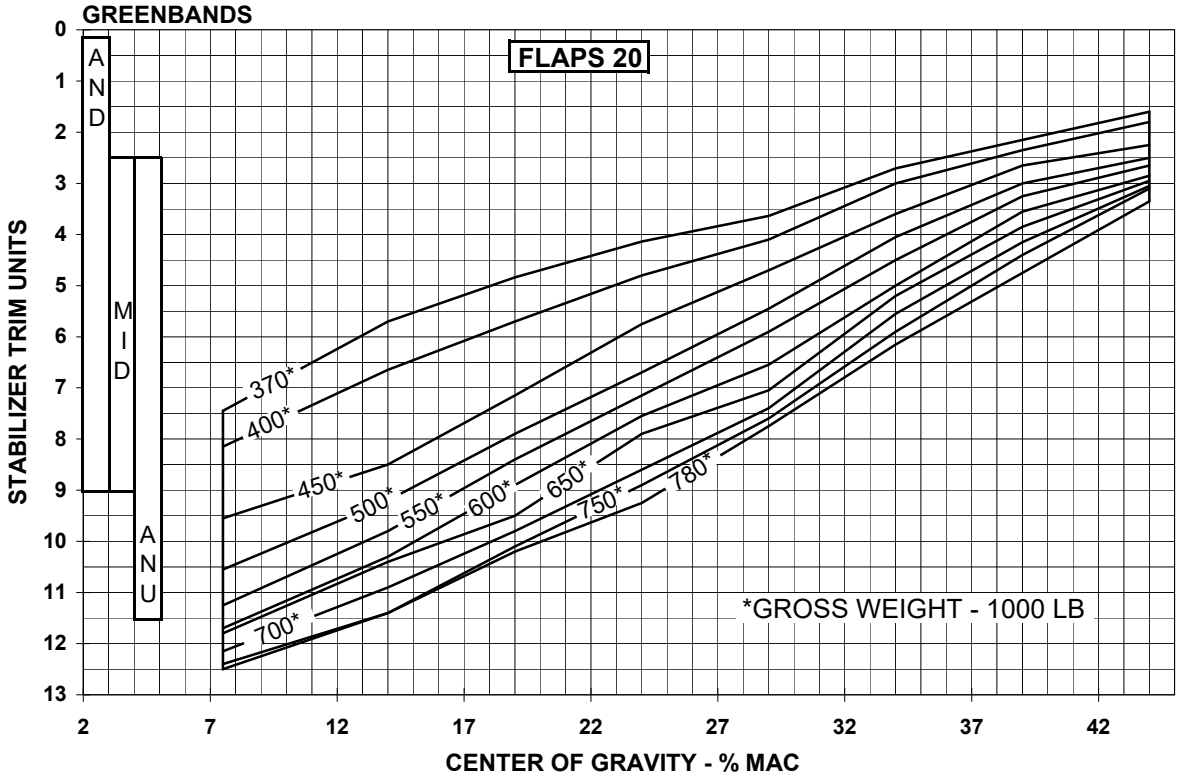

The following table provides inflection point data for the Takeoff Trim Settings versus Airplane Center of Gravity Diagram above.

TAKEOFF TRIM SETTING INFLECTION POINTS (Gross Weight - 1000 LB)																			
370		400		450		500		550		600		650		700		750		780	
C.G.	STAB TRIM	C.G.	STAB TRIM	C.G.	STAB TRIM	C.G.	STAB TRIM	C.G.	STAB TRIM	C.G.	STAB TRIM	C.G.	STAB TRIM	C.G.	STAB TRIM	C.G.	STAB TRIM	C.G.	STAB TRIM
7.5	7.45	7.5	8.15	7.5	9.55	7.5	10.55	7.5	11.25	7.5	11.70	7.5	11.80	7.5	12.15	7.5	12.40	7.5	12.50
14.0	5.70	14.0	6.65	14.0	8.50	14.0	9.20	14.0	9.80	14.0	10.30	14.0	10.40	14.0	10.90	14.0	11.40	14.0	11.40
19.0	4.84	19.0	5.70	19.0	7.15	19.0	7.90	19.0	8.40	19.0	8.90	19.0	9.50	19.0	9.80	19.0	10.10	19.0	10.20
24.0	4.14	24.0	4.80	24.0	5.75	24.0	6.70	24.0	7.15	24.0	7.55	24.0	7.90	24.0	8.60	24.0	8.90	24.0	9.25
29.0	3.64	29.0	4.10	29.0	4.70	29.0	5.45	29.0	5.90	29.0	6.55	29.0	7.05	29.0	7.40	29.0	7.60	29.0	7.75
34.0	2.71	34.0	3.00	34.0	3.60	34.0	4.05	34.0	4.50	34.0	5.00	34.0	5.20	34.0	5.55	34.0	5.90	34.0	6.15
39.0	2.15	39.0	2.35	39.0	2.65	39.0	3.00	39.0	3.25	39.0	3.55	39.0	3.85	39.0	4.15	39.0	4.40	39.0	4.75
44.0	1.60	44.0	1.80	44.0	2.25	44.0	2.50	44.0	2.65	44.0	2.85	44.0	2.95	44.0	3.05	44.0	3.10	44.0	3.35

APPLICABLE CONFIGURATIONS
All

BOEING PROPRIETARY
Export Controlled by ECCN 9E991

TAKEOFF HORIZONTAL STABILIZER TRIM SETTING (Continued)

GE90-115B ENGINES - METRIC UNITS FLAPS 20 - MULTIPLE GREEN BANDS

The following diagram provides Takeoff Trim Settings versus Airplane Center of Gravity for Flaps 20 in kilograms.

Thrust Derate Greater than 15% - Flaps 20

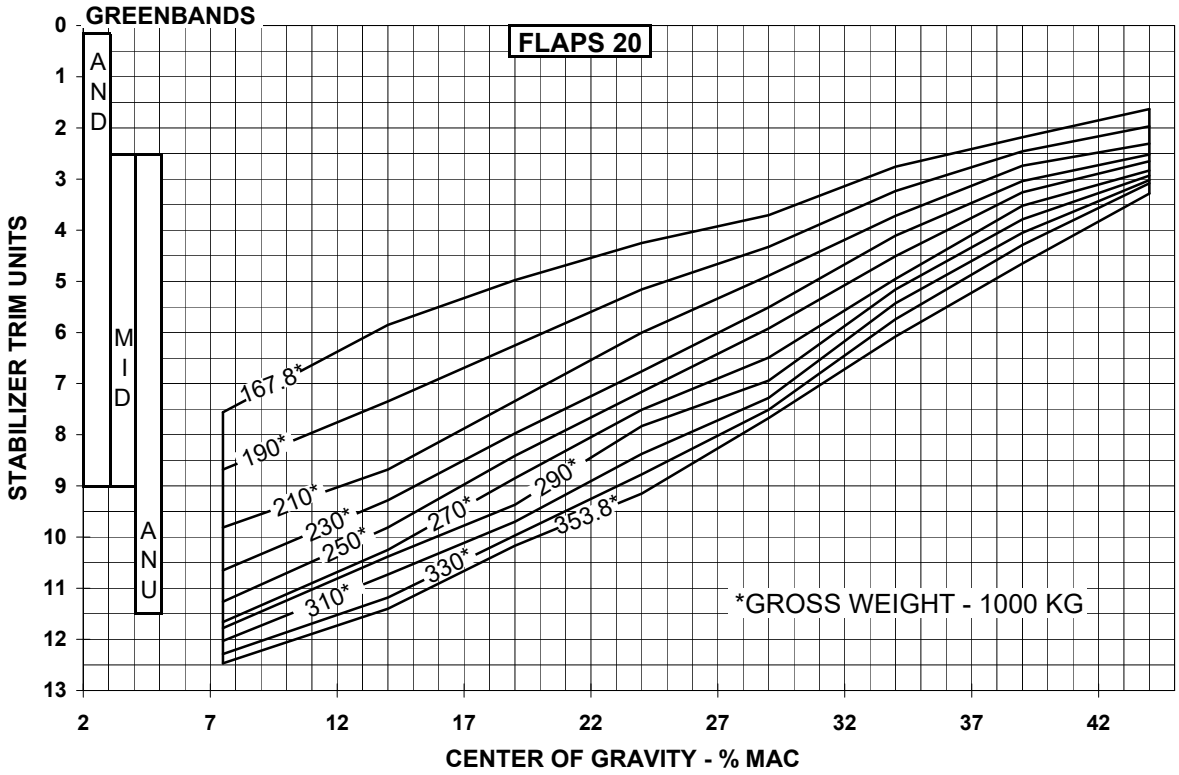

The following table provides inflection point data for the Takeoff Trim Settings versus Airplane Center of Gravity Diagram above.

TAKEOFF TRIM SETTING INFLECTION POINTS (Gross Weight - 1000 KG)																			
167.8		190		210		230		250		270		290		310		330		353.8	
C.G.	STAB TRIM	C.G.	STAB TRIM	C.G.	STAB TRIM	C.G.	STAB TRIM	C.G.	STAB TRIM	C.G.	STAB TRIM	C.G.	STAB TRIM	C.G.	STAB TRIM	C.G.	STAB TRIM	C.G.	STAB TRIM
7.5	7.45	7.5	8.68	7.5	9.81	7.5	10.65	7.5	11.26	7.5	11.66	7.5	11.78	7.5	12.03	7.5	12.29	7.5	12.50
14.0	5.70	14.0	7.35	14.0	8.68	14.0	9.28	14.0	9.81	14.0	10.25	14.0	10.38	14.0	10.73	14.0	11.18	14.0	11.40
19.0	4.84	19.0	6.25	19.0	7.34	19.0	7.97	19.0	8.41	19.0	8.85	19.0	9.37	19.0	9.70	19.0	9.97	19.0	10.20
24.0	4.14	24.0	5.16	24.0	6.00	24.0	6.76	24.0	7.16	24.0	7.51	24.0	7.83	24.0	8.37	24.0	8.77	24.0	9.25
29.0	3.64	29.0	4.33	29.0	4.89	29.0	5.51	29.0	5.92	29.0	6.49	29.0	6.94	29.0	7.28	29.0	7.51	29.0	7.75
34.0	2.71	34.0	3.23	34.0	3.72	34.0	4.11	34.0	4.51	34.0	4.95	34.0	5.16	34.0	5.43	34.0	5.74	34.0	6.15
39.0	2.15	39.0	2.46	39.0	2.74	39.0	3.04	39.0	3.26	39.0	3.52	39.0	3.79	39.0	4.05	39.0	4.29	39.0	4.75
44.0	1.60	44.0	1.97	44.0	2.31	44.0	2.52	44.0	2.65	44.0	2.83	44.0	2.93	44.0	3.02	44.0	3.08	44.0	3.35

APPLICABLE CONFIGURATIONS
All

BOEING PROPRIETARY
Export Controlled by ECCN 9E991

LANDING GEAR AND FLAP MOVEMENT BALANCE EFFECT

LANDING GEAR RETRACTION MOMENT

The following table provides airplane moment changes caused by retraction of the landing gear from the taxi position (extended, gear down) to the flight position (retracted, gear up).

GEAR	MOMENT	
	LB-IN.	KG-IN.
Nose (Down to Up)	-120700	-54700
Main (Down to Up)	-267300	-121300
Total Moment Change	-388000	-176000

FLAPS RETRACTION MOMENT

The following table provides airplane moment changes caused by retraction of the leading edge (L.E.) and the trailing edge (T.E.) flaps.

FLAP POSITION		MOMENT LB-IN.			MOMENT KG-IN.		
FROM	TO	L.E. FLAPS	T.E. FLAPS	TOTAL	L.E. FLAPS	T.E. FLAPS	TOTAL
30	25	0	-10600	-10600	0	- 4800	- 4800
30	20	+4900	-31200	-26300	+ 2200	- 14200	- 12000
30	15	+4900	-50900	-46000	+ 2200	- 23100	- 20900
30	5	+4900	-71900	- 67000	+ 2200	- 32600	- 30400
30	1	+4900	-140400	- 135500	+ 2200	- 63700	- 61500
30	0	+ 21000	-140400	- 119400	+9500	- 63700	- 54200

NOTE A forward movement of airplane center of gravity is a negative moment. An aft movement of airplane center of gravity is a positive moment.

APPLICABLE CONFIGURATIONS
All

BOEING PROPRIETARY
Export Controlled by ECCN 9E991

FUEL TANK ARRANGEMENT AND CAPACITIES

FUEL TANK LOCATIONS

The following diagram shows the fuel tank arrangement:

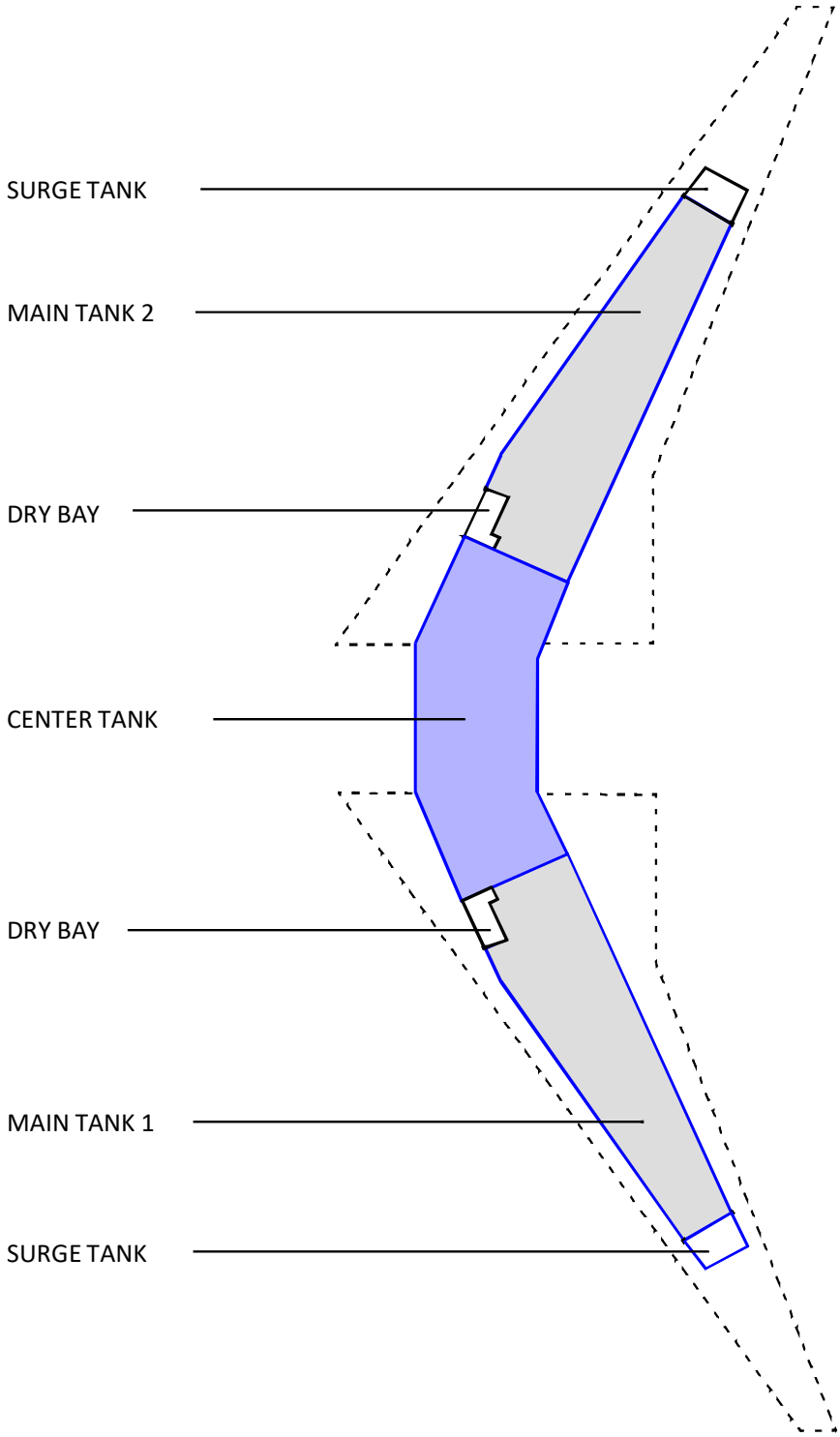

APPLICABLE CONFIGURATIONS
All

BOEING PROPRIETARY
Export Controlled by ECCN 9E991

FUEL TANK ARRANGEMENT AND CAPACITIES (Continued)

MAXIMUM ALLOWABLE FUEL WEIGHT

The maximum allowable usable tank quantities shown in the following table are based on a fuel density of 7.1 LB/U.S. GAL. (0.8507 KG/L).

LOCATION	MAXIMUM VOLUME		MAXIMUM WEIGHT	
	U.S. GAL.	L	LB	KG
Main Tank 1 or 2	10300	38989	73130	33171
Center Tank	27290	103303	193759	87887

USABLE FUEL QUANTITIES AND LOCATIONS

The following table provides volume and center of gravity data for usable fuel. For definitions of “usable”, “drainable usable” and “trapped usable”, refer to General Information (CHP-SEC 1-00-001).

FUEL CATEGORY	FUEL LOCATION	VOLUME		B.A. IN.
		U.S. GAL.	L	
Drainable Usable	Main Tank 1	10300	38989	1321.3
	Main Tank 2	10300	38989	1321.3
	Center Tank	27290	103303	1146.4
	Manifold	62[b]	235[b]	1295.6
	Total Drainable	47952	181516	1221.7
Trapped Usable	Feed Lines[a]	12.0[b]	45.4[b]	1228.9
	Engines	9.4[b]	35.6[b]	1032.5
	Total Trapped	21.4[b]	81.0[b]	1142.6
TOTAL USABLE		47973	181597	1221.7

[a] All fuel in lines between boost pump check valves and engine pump inlets, bypass valves, defuel valves, and APU fuel control. Pump inlet line volume included in tank volume.
[b] These volumes are not gauged.

APPLICABLE CONFIGURATIONS
All

BOEING PROPRIETARY
Export Controlled by ECCN 9E991

FUEL TANK ARRANGEMENT AND CAPACITIES (Continued)

UNUSABLE FUEL QUANTITIES AND LOCATIONS

The following table provides volume and center of gravity data for unusable fuel. For definitions of “unusable”, “drainable unusable” and “trapped unusable”, refer to General Information (CHP-SEC 1-00-001).

FUEL CATEGORY	FUEL LOCATION	VOLUME		B.A. IN.
		U.S. GAL.	L	
Drainable Unusable[a]	Main Tank 1	11.0	41.6	1253.8
	Main Tank 2	11.0	41.6	1253.8
	Center Tank	0.0[b]	0.0[b]	1153.4
	Total Drainable	22.0	83.2	1253.8
Trapped Unusable[a]	Main Tank 1	2.5	9.5	1253.8
	Main Tank 2	2.5	9.5	1253.8
	Center Tank	27.4	103.7	1153.4
	Feed Line[c]	18.9	71.5	1272.6
	Total Trapped	51.3	194.2	1207.1
TOTAL UNUSABLE		73.3	277.4	1221.1

[a] Based on an airplane nominal ground attitude of 0.54 degrees nose down and 0 degrees roll.
[b] During normal operations with scavenge system in use.
[c] All fuel in lines between boost pump check valves and engine pump inlets, bypass valves, defuel valves, and APU fuel control. Pump inlet volume included in tank volume.

APPLICABLE CONFIGURATIONS
All

BOEING PROPRIETARY
Export Controlled by ECCN 9E991

FUEL MANAGEMENT

FUEL LOADING PROCEDURES

Fuel loading limitations and procedures are detailed below.

Loading Limitations

Fuel density must be between the minimum allowable fuel density of 6.1 LB/GAL. (0.7309 KG/L) and the maximum allowable fuel density of 7.1 LB/GAL. (0.8507 KG/L). Minimum fuel density may be further restricted by zero fuel weight (see Limitations in CHP-SCE 1-02-xxx for applicability).

When center tank fuel is required for the mission, an additional 700 LB (320 KG) of reserve fuel must be added to the center tank fuel load.

NOTES
- The reserve fuel requirement above must be implemented within 60 months of the effective date of AD 2016-11-03. This date is 6 July, 2021.
- This is not applicable to airplanes with line numbers of 1099 and on.
- The additional reserve fuel meets the requirements from Alternative Method of Compliance (AMOC) for AD 2016-11-03 as documented in FAA Letter 140S-7-48. To avoid carrying additional fuel per requirement, perform the termination actions identified within AD 2016-11-03.

Loading Procedures

Use the following procedures for loading fuel:

1. Load main tanks 1 and 2 equally to the desired fuel quantity or until full.
2. Load center tank if additional fuel is required with main tanks 1 and 2 full.
   - ❑ When center tank fuel is required for the mission, an additional 700 LB (320 KG) of reserve fuel must be added to the center tank fuel load.

Up to 3000 LB (1360 KG) of fuel may be loaded in the center tank with less than full main tanks, provided the weight of the fuel in the center tank plus the actual Zero Fuel Weight does not exceed the Maximum Zero Fuel Weight, and balance limits are observed. Fuel must be used in accordance with the Fuel Usage for the center tank fuel.

NOTE Recommended fuel loading reflects the final dispatch fuel distribution, not a loading sequence. Fuel tanks may be loaded individually, simultaneously or in any sequence.

LATERAL FUEL IMBALANCE

The following random lateral imbalance criteria between main tanks 1 and 2 must be observed for all ground operations (taxi, takeoff, and landing):

- ❑ Random lateral fuel imbalance must not exceed 4000 LB (1814 KG) when total main tank fuel is less than or equal to 90000 LB (40823 KG).

APPLICABLE CONFIGURATIONS
All

BOEING PROPRIETARY
Export Controlled by ECCN 9E991

FUEL MANAGEMENT (Continued)

- Random lateral fuel imbalance must not exceed 3000 LB (1360 KG) when total main tank fuel exceeds 123000 LB (55791 KG).
- Allowable lateral fuel imbalance is determined using linear interpolation between 4000 LB (1814 KG) and 3000 LB (1360 KG) when the main tank fuel is greater than 90000 LB (40823 KG) and less than or equal to 123000 LB (55791 KG), respectively.

APPLICABLE CONFIGURATIONS
All

BOEING PROPRIETARY
Export Controlled by ECCN 9E991

FUEL MANAGEMENT (Continued)

FUEL USAGE PROCEDURES

With no center tank fuel, use main tank-to-engine fuel feed with all operable main tank boost pumps on and the crossfeed valves closed.*

The following is not applicable upon incorporation of Boeing Service Bulletin 777-28A0040 or 777-28A0039.

With center tank fuel, use center tank fuel for all operations with all operable boost pumps on and the crossfeed valves closed* until the FUEL LOW CENTER advisory message is displayed. Then continue flight using main tank-to-engine fuel feed with all operable main tank boost pumps on and the crossfeed valves closed.*

*A crossfeed valve is opened for minimum fuel operation. To correct fuel imbalance, open a crossfeed valve and turn the low tank boost pumps off.

The following is applicable upon incorporation of Boeing Service Bulletin 777-28A0040 or 777-28A0039 or production equivalent. (Line number 556 and on - Reference PRR 61998-2).

With center tank fuel quantity greater than 10500 LB (4762 KG), use center tank fuel for all operations with all operable boost pumps on and the crossfeed valves closed* until the FUEL LOW CENTER advisory message is displayed. Then continue flight using main tank-to-engine fuel feed with all operable main tank boost pumps on and the crossfeed valves closed.* If the FUEL IN CENTER advisory message displays in stabilized cruise, use center tank fuel with all operable boost pumps on and the crossfeed valves closed* until the FUEL LOW CENTER advisory message is again displayed. Then continue flight using main tank-to-engine fuel feed with all operable main tank boost pumps on and the crossfeed valves closed. *

With center tank fuel quantity less than or equal to 10500 LB (4762 KG), use main tank-to-engine fuel feed with all operable main tank boost pumps on and the crossfeed valves closed.* Once in stabilized cruise, if the FUEL IN CENTER advisory message displays, use center tank fuel with all operable boost pumps on and the crossfeed valves closed * until the FUEL LOW CENTER advisory message is displayed. Then continue flight using main tank-to-engine fuel feed with all operable main tank boost pumps on and the crossfeed valves closed.*

*A crossfeed valve is opened for minimum fuel operation. To correct fuel imbalance, open a crossfeed valve and turn the low tank boost pumps off.

NOTE Refer to the Airplane Flight Manual, Section 1 for fuel usage procedure.

APU FUEL USAGE

Fuel consumption should be accounted for during APU operation per instructions in the Operations Manual.

APPLICABLE CONFIGURATIONS
All

BOEING PROPRIETARY
Export Controlled by ECCN 9E991

FUEL TANK QUANTITIES AND BALANCE ARMS

COMBINED MAIN TANKS 1 AND 2 IN U.S. GALLONS

The following table provides usable, gauged fuel data in U.S. gallons.

U.S. GALLONS

MAIN TANKS 1 & 2		MAIN TANKS 1 & 2	
VOLUME U.S. GAL.	B.A. IN.	VOLUME U.S. GAL	B.A. IN.
100	1253.8	3100	1249.9
200	1250.6	3200	1250.1
300	1248.7	3300	1250.3
400	1247.6	3400	1250.5
500	1247.0	3500	1250.6
600	1246.6	3600	1250.8
700	1246.4	3700	1251.0
800	1246.2	3800	1251.1
900	1246.1	3900	1251.3
1000	1246.1	4000	1251.5
1100	1246.2	4100	1251.6
1200	1246.2	4200	1251.8
1300	1246.3	4300	1251.9
1400	1246.5	4400	1252.1
1500	1246.6	4500	1252.2
1600	1246.8	4600	1252.3
1700	1247.0	4700	1252.5
1800	1247.1	4800	1252.6
1900	1247.3	4900	1252.7
2000	1247.6	5000	1252.9
2100	1247.8	5100	1253.0
2200	1248.0	5200	1253.1
2300	1248.2	5300	1253.2
2400	1248.4	5400	1253.4
2500	1248.7	5500	1253.5
2600	1248.9	5600	1253.6
2700	1249.1	5700	1253.7
2800	1249.3	5800	1253.9
2900	1249.5	5900	1254.0
3000	1249.7	6000	1254.1

APPLICABLE CONFIGURATIONS
All

BOEING PROPRIETARY
Export Controlled by ECCN 9E991

FUEL TANK QUANTITIES AND BALANCE ARMS (Continued)

U.S. GALLONS (Continued)

MAIN TANKS 1 & 2		MAIN TANKS 1 & 2	
VOLUME U.S. GAL.	B.A. IN.	VOLUME U.S. GAL	B.A. IN.
6100	1254.2	9600	1259.7
6200	1254.3	9700	1259.9
6300	1254.5	9800	1260.1
6400	1254.6	9900	1260.3
6500	1254.7	10000	1260.6
6600	1254.8	10100	1260.8
6700	1254.9	10200	1261.1
6800	1255.1	10300	1261.3
6900	1255.2	10400	1261.5
7000	1255.3	10500	1261.8
7100	1255.4	10600	1262.0
7200	1255.6	10700	1262.3
7300	1255.7	10800	1262.6
7400	1255.8	10900	1262.8
7500	1256.0	11000	1263.1
7600	1256.1	11100	1263.4
7700	1256.2	11200	1263.7
7800	1256.4	11300	1264.0
7900	1256.5	11400	1264.3
8000	1256.7	11500	1264.6
8100	1256.8	11600	1264.9
8200	1257.0	11700	1265.2
8300	1257.1	11800	1265.5
8400	1257.3	11900	1265.9
8500	1257.5	12000	1266.2
8600	1257.7	12100	1266.6
8700	1257.8	12200	1266.9
8800	1258.0	12300	1267.3
8900	1258.2	12400	1267.7
9000	1258.4	12500	1268.1
9100	1258.6	12600	1268.5
9200	1258.8	12700	1268.9
9300	1259.0	12800	1269.3
9400	1259.2	12900	1269.7
9500	1259.4	13000	1270.1

APPLICABLE CONFIGURATIONS
All

BOEING PROPRIETARY
Export Controlled by ECCN 9E991

FUEL TANK QUANTITIES AND BALANCE ARMS (Continued)

U.S. GALLONS (Continued)

MAIN TANKS 1 & 2		MAIN TANKS 1 & 2	
VOLUME U.S. GAL.	B.A. IN.	VOLUME U.S. GAL	B.A. IN.
13100	1270.5	16600	1289.2
13200	1270.9	16700	1289.8
13300	1271.4	16800	1290.5
13400	1271.8	16900	1291.1
13500	1272.3	17000	1291.8
13600	1272.7	17100	1292.5
13700	1273.2	17200	1293.1
13800	1273.6	17300	1293.8
13900	1274.1	17400	1294.5
14000	1274.6	17500	1295.2
14100	1275.0	17600	1295.9
14200	1275.5	17700	1296.6
14300	1276.0	17800	1297.3
14400	1276.5	17900	1298.1
14500	1277.0	18000	1298.8
14600	1277.5	18100	1299.5
14700	1278.1	18200	1300.3
14800	1278.6	18300	1301.1
14900	1279.1	18400	1301.8
15000	1279.7	18500	1302.6
15100	1280.2	18600	1303.4
15200	1280.8	18700	1304.2
15300	1281.3	18800	1305.0
15400	1281.9	18900	1305.8
15500	1282.5	19000	1306.6
15600	1283.0	19100	1307.4
15700	1283.6	19200	1308.3
15800	1284.2	19300	1309.1
15900	1284.8	19400	1310.0
16000	1285.4	19500	1310.9
16100	1286.0	19600	1311.7
16200	1286.6	19700	1312.6
16300	1287.3	19800	1313.5
16400	1287.9	19900	1314.5
16500	1288.5	20000	1315.4

APPLICABLE CONFIGURATIONS
All

BOEING PROPRIETARY
Export Controlled by ECCN 9E991

FUEL TANK QUANTITIES AND BALANCE ARMS (Continued)

U.S. GALLONS (Continued)

MAIN TANKS 1 & 2	
VOLUME U.S. GAL.	B.A. IN.
20100	1316.3
20200	1317.3
20300	1318.3

MAIN TANKS 1 & 2	
VOLUME U.S. GAL	B.A. IN.
20400	1319.3
20500	1320.3
20600	1321.3

APPLICABLE CONFIGURATIONS
All

BOEING PROPRIETARY
Export Controlled by ECCN 9E991

FUEL TANK QUANTITIES AND BALANCE ARMS (Continued)

COMBINED MAIN TANKS 1 AND 2 IN LITERS

The following table provides usable, gauged fuel data in liters.

LITERS

MAIN TANKS 1 & 2		MAIN TANKS 1 & 2	
VOLUME L	B.A. IN.	VOLUME L	B.A. IN.
400	1253.6	12400	1250.2
800	1250.3	12800	1250.4
1200	1248.5	13200	1250.6
1600	1247.4	13600	1250.8
2000	1246.8	14000	1251.0
2400	1246.5	14400	1251.1
2800	1246.3	14800	1251.3
3200	1246.2	15200	1251.5
3600	1246.1	15600	1251.6
4000	1246.1	16000	1251.8
4400	1246.2	16400	1252.0
4800	1246.3	16800	1252.1
5200	1246.4	17200	1252.2
5600	1246.6	17600	1252.4
6000	1246.7	18000	1252.5
6400	1246.9	18400	1252.7
6800	1247.1	18800	1252.8
7200	1247.3	19200	1252.9
7600	1247.6	19600	1253.1
8000	1247.8	20000	1253.2
8400	1248.0	20400	1253.3
8800	1248.3	20800	1253.5
9200	1248.5	21200	1253.6
9600	1248.7	21600	1253.7
10000	1249.0	22000	1253.9
10400	1249.2	22400	1254.0
10800	1249.4	22800	1254.1
11200	1249.6	23200	1254.2
11600	1249.8	23600	1254.4
12000	1250.0	24000	1254.5

APPLICABLE CONFIGURATIONS
All

BOEING PROPRIETARY
Export Controlled by ECCN 9E991

FUEL TANK QUANTITIES AND BALANCE ARMS (Continued)

LITERS (Continued)

MAIN TANKS 1 & 2		MAIN TANKS 1 & 2	
VOLUME L	B.A. IN.	VOLUME L	B.A. IN.
24400	1254.6	38400	1260.9
24800	1254.7	38800	1261.2
25200	1254.9	39200	1261.4
25600	1255.0	39600	1261.7
26000	1255.1	40000	1262.0
26400	1255.3	40400	1262.2
26800	1255.4	40800	1262.5
27200	1255.5	41200	1262.8
27600	1255.7	41600	1263.1
28000	1255.8	42000	1263.4
28400	1256.0	42400	1263.7
28800	1256.1	42800	1264.0
29200	1256.3	43200	1264.3
29600	1256.4	43600	1264.6
30000	1256.6	44000	1265.0
30400	1256.7	44400	1265.3
30800	1256.9	44800	1265.7
31200	1257.0	45200	1266.0
31600	1257.2	45600	1266.4
32000	1257.4	46000	1266.8
32400	1257.6	46400	1267.2
32800	1257.8	46800	1267.5
33200	1258.0	47200	1267.9
33600	1258.2	47600	1268.4
34000	1258.4	48000	1268.8
34400	1258.6	48400	1269.2
34800	1258.8	48800	1269.6
35200	1259.0	49200	1270.1
35600	1259.2	49600	1270.5
36000	1259.5	50000	1271.0
36400	1259.7	50400	1271.4
36800	1259.9	50800	1271.9
37200	1260.2	51200	1272.4
37600	1260.4	51600	1272.8
38000	1260.7	52000	1273.3

APPLICABLE CONFIGURATIONS
All

BOEING PROPRIETARY
Export Controlled by ECCN 9E991

FUEL TANK QUANTITIES AND BALANCE ARMS (Continued)

LITERS (Continued)

MAIN TANKS 1 & 2	
VOLUME L	B.A. IN.
52400	1273.8
52800	1274.3
53200	1274.8
53600	1275.3
54000	1275.8
54400	1276.4
54800	1276.9
55200	1277.4
55600	1278.0
56000	1278.5
56400	1279.1
56800	1279.7
57200	1280.3
57600	1280.8
58000	1281.4
58400	1282.0
58800	1282.6
59200	1283.3
59600	1283.9
60000	1284.5
60400	1285.1
60800	1285.8
61200	1286.4
61600	1287.1
62000	1287.8
62400	1288.4
62800	1289.1
63200	1289.8
63600	1290.5
64000	1291.2
64400	1291.9
64800	1292.6
65200	1293.3

MAIN TANKS 1 & 2	
VOLUME L	B.A. IN.
65600	1294.0
66000	1294.7
66400	1295.5
66800	1296.2
67200	1297.0
67600	1297.8
68000	1298.5
68400	1299.3
68800	1300.1
69200	1300.9
69600	1301.7
70000	1302.5
70400	1303.4
70800	1304.2
71200	1305.1
71600	1305.9
72000	1306.8
72400	1307.7
72800	1308.5
73200	1309.4
73600	1310.4
74000	1311.3
74400	1312.2
74800	1313.2
75200	1314.1
75600	1315.1
76000	1316.1
76400	1317.1
76800	1318.2
77200	1319.2
77600	1320.2
77978	1321.3

APPLICABLE CONFIGURATIONS
All

BOEING PROPRIETARY
Export Controlled by ECCN 9E991

FUEL TANK QUANTITIES AND BALANCE ARMS

CENTER TANK IN U.S. GALLONS

The following table provides usable, gauged fuel data in U.S. gallons.

U.S. GALLONS

CENTER TANK		CENTER TANK	
VOLUME U.S. GAL.	B.A. IN.	VOLUME U.S. GAL	B.A. IN.
100	1153.4	3100	1148.6
200	1153.6	3200	1148.4
300	1154.1	3300	1148.2
400	1154.5	3400	1148.0
500	1154.9	3500	1147.9
600	1155.2	3600	1147.7
700	1155.5	3700	1147.6
800	1155.6	3800	1147.4
900	1155.6	3900	1147.3
1000	1155.4	4000	1147.2
1100	1155.1	4100	1147.1
1200	1154.8	4200	1147.0
1300	1154.5	4300	1147.0
1400	1154.1	4400	1146.9
1500	1153.8	4500	1146.8
1600	1153.4	4600	1146.7
1700	1153.1	4700	1146.7
1800	1152.7	4800	1146.6
1900	1152.3	4900	1146.6
2000	1152.0	5000	1146.5
2100	1151.6	5100	1146.5
2200	1151.3	5200	1146.5
2300	1150.9	5300	1146.4
2400	1150.6	5400	1146.4
2500	1150.3	5500	1146.4
2600	1149.9	5600	1146.4
2700	1149.6	5700	1146.3
2800	1149.3	5800	1146.3
2900	1149.1	5900	1146.3
3000	1148.8	6000	1146.3

APPLICABLE CONFIGURATIONS
All

BOEING PROPRIETARY
Export Controlled by ECCN 9E991

FUEL TANK QUANTITIES AND BALANCE ARMS (Continued)

U.S. GALLONS (Continued)

CENTER TANK		CENTER TANK	
VOLUME U.S. GAL.	B.A. IN.	VOLUME U.S. GAL	B.A. IN.
6100	1146.3	9600	1147.2
6200	1146.3	9700	1147.3
6300	1146.3	9800	1147.3
6400	1146.3	9900	1147.3
6500	1146.3	10000	1147.4
6600	1146.3	10100	1147.4
6700	1146.3	10200	1147.4
6800	1146.4	10300	1147.5
6900	1146.4	10400	1147.5
7000	1146.4	10500	1147.5
7100	1146.4	10600	1147.6
7200	1146.4	10700	1147.6
7300	1146.5	10800	1147.6
7400	1146.5	10900	1147.7
7500	1146.5	11000	1147.7
7600	1146.5	11100	1147.7
7700	1146.6	11200	1147.7
7800	1146.6	11300	1147.8
7900	1146.6	11400	1147.8
8000	1146.6	11500	1147.8
8100	1146.7	11600	1147.8
8200	1146.7	11700	1147.9
8300	1146.7	11800	1147.9
8400	1146.8	11900	1147.9
8500	1146.8	12000	1147.9
8600	1146.8	12100	1148.0
8700	1146.9	12200	1148.0
8800	1146.9	12300	1148.0
8900	1147.0	12400	1148.0
9000	1147.0	12500	1148.0
9100	1147.0	12600	1148.1
9200	1147.1	12700	1148.1
9300	1147.1	12800	1148.1
9400	1147.2	12900	1148.1
9500	1147.2	13000	1148.1

APPLICABLE CONFIGURATIONS
All

BOEING PROPRIETARY
Export Controlled by ECCN 9E991

FUEL TANK QUANTITIES AND BALANCE ARMS (Continued)

U.S. GALLONS (Continued)

CENTER TANK		CENTER TANK	
VOLUME U.S. GAL.	B.A. IN.	VOLUME U.S. GAL	B.A. IN.
13100	1148.2	16600	1148.6
13200	1148.2	16700	1148.6
13300	1148.2	16800	1148.6
13400	1148.2	16900	1148.6
13500	1148.2	17000	1148.6
13600	1148.2	17100	1148.6
13700	1148.3	17200	1148.6
13800	1148.3	17300	1148.7
13900	1148.3	17400	1148.7
14000	1148.3	17500	1148.7
14100	1148.3	17600	1148.7
14200	1148.3	17700	1148.7
14300	1148.3	17800	1148.7
14400	1148.4	17900	1148.7
14500	1148.4	18000	1148.7
14600	1148.4	18100	1148.7
14700	1148.4	18200	1148.7
14800	1148.4	18300	1148.7
14900	1148.4	18400	1148.7
15000	1148.4	18500	1148.7
15100	1148.4	18600	1148.7
15200	1148.5	18700	1148.8
15300	1148.5	18800	1148.8
15400	1148.5	18900	1148.8
15500	1148.5	19000	1148.8
15600	1148.5	19100	1148.8
15700	1148.5	19200	1148.8
15800	1148.5	19300	1148.8
15900	1148.5	19400	1148.8
16000	1148.5	19500	1148.8
16100	1148.5	19600	1148.8
16200	1148.6	19700	1148.8
16300	1148.6	19800	1148.8
16400	1148.6	19900	1148.8
16500	1148.6	20000	1148.8

APPLICABLE CONFIGURATIONS
All

BOEING PROPRIETARY
Export Controlled by ECCN 9E991

FUEL TANK QUANTITIES AND BALANCE ARMS (Continued)

U.S. GALLONS (Continued)

CENTER TANK	
VOLUME U.S. GAL.	B.A. IN.
20100	1148.8
20200	1148.8
20300	1148.8
20400	1148.9
20500	1148.9
20600	1148.9
20700	1148.9
20800	1148.9
20900	1148.9
21000	1148.9
21100	1148.9
21200	1148.9
21300	1148.9
21400	1148.9
21500	1148.9
21600	1148.9
21700	1148.9
21800	1148.9
21900	1148.9
22000	1148.9
22100	1148.8
22200	1148.8
22300	1148.8
22400	1148.8
22500	1148.8
22600	1148.8
22700	1148.7
22800	1148.7
22900	1148.7
23000	1148.6
23100	1148.6
23200	1148.6
23300	1148.5
23400	1148.5
23500	1148.5
23600	1148.4
23700	1148.4

CENTER TANK	
VOLUME U.S. GAL	B.A. IN.
23800	1148.3
23900	1148.3
24000	1148.2
24100	1148.2
24200	1148.1
24300	1148.1
24400	1148.0
24500	1148.0
24600	1147.9
24700	1147.9
24800	1147.8
24900	1147.7
25000	1147.7
25100	1147.6
25200	1147.5
25300	1147.4
25400	1147.4
25500	1147.3
25600	1147.2
25700	1147.1
25800	1147.0
25900	1146.9
26000	1146.9
26100	1146.8
26200	1146.7
26300	1146.6
26400	1146.5
26500	1146.5
26600	1146.5
26700	1146.5
26800	1146.5
26900	1146.5
27000	1146.4
27100	1146.4
27200	1146.4
27290	1146.4

APPLICABLE CONFIGURATIONS
All

BOEING PROPRIETARY
Export Controlled by ECCN 9E991

FUEL TANK QUANTITIES AND BALANCE ARMS (Continued)

CENTER TANK IN LITERS

The following table provides usable, gauged fuel data in liters.

LITERS

CENTER TANK		CENTER TANK	
VOLUME L	B.A. IN.	VOLUME L	B.A. IN.
400	1153.4	12400	1148.2
800	1153.7	12800	1148.0
1200	1154.2	13200	1147.9
1600	1154.6	13600	1147.7
2000	1154.9	14000	1147.6
2400	1155.3	14400	1147.4
2800	1155.6	14800	1147.3
3200	1155.6	15200	1147.2
3600	1155.5	15600	1147.1
4000	1155.3	16000	1147.0
4400	1155.0	16400	1146.9
4800	1154.6	16800	1146.8
5200	1154.2	17200	1146.8
5600	1153.9	17600	1146.7
6000	1153.5	18000	1146.6
6400	1153.1	18400	1146.6
6800	1152.7	18800	1146.5
7200	1152.3	19200	1146.5
7600	1151.9	19600	1146.5
8000	1151.6	20000	1146.4
8400	1151.2	20400	1146.4
8800	1150.8	20800	1146.4
9200	1150.5	21200	1146.4
9600	1150.1	21600	1146.3
10000	1149.8	22000	1146.3
10400	1149.5	22400	1146.3
10800	1149.2	22800	1146.3
11200	1148.9	23200	1146.3
11600	1148.7	23600	1146.3
12000	1148.4	24000	1146.3

APPLICABLE CONFIGURATIONS
All

BOEING PROPRIETARY
Export Controlled by ECCN 9E991

FUEL TANK QUANTITIES AND BALANCE ARMS (Continued)

LITERS (Continued)

CENTER TANK		CENTER TANK	
VOLUME L	B.A. IN.	VOLUME L	B.A. IN.
24400	1146.3	38400	1147.4
24800	1146.3	38800	1147.5
25200	1146.3	39200	1147.5
25600	1146.3	39600	1147.5
26000	1146.4	40000	1147.6
26400	1146.4	40400	1147.6
26800	1146.4	40800	1147.6
27200	1146.4	41200	1147.6
27600	1146.4	41600	1147.7
28000	1146.5	42000	1147.7
28400	1146.5	42400	1147.7
28800	1146.5	42800	1147.8
29200	1146.5	43200	1147.8
29600	1146.6	43600	1147.8
30000	1146.6	44000	1147.8
30400	1146.6	44400	1147.9
30800	1146.7	44800	1147.9
31200	1146.7	45200	1147.9
31600	1146.7	45600	1147.9
32000	1146.8	46000	1148.0
32400	1146.8	46400	1148.0
32800	1146.9	46800	1148.0
33200	1146.9	47200	1148.0
33600	1146.9	47600	1148.1
34000	1147.0	48000	1148.1
34400	1147.0	48400	1148.1
34800	1147.1	48800	1148.1
35200	1147.1	49200	1148.1
35600	1147.2	49600	1148.2
36000	1147.2	50000	1148.2
36400	1147.2	50400	1148.2
36800	1147.3	50800	1148.2
37200	1147.3	51200	1148.2
37600	1147.3	51600	1148.2
38000	1147.4	52000	1148.3

APPLICABLE CONFIGURATIONS
All

BOEING PROPRIETARY
Export Controlled by ECCN 9E991

FUEL TANK QUANTITIES AND BALANCE ARMS (Continued)

LITERS (Continued)

CENTER TANK		CENTER TANK	
VOLUME L	B.A. IN.	VOLUME L	B.A. IN.
52400	1148.3	66400	1148.7
52800	1148.3	66800	1148.7
53200	1148.3	67200	1148.7
53600	1148.3	67600	1148.7
54000	1148.3	68000	1148.7
54400	1148.3	68400	1148.7
54800	1148.4	68800	1148.7
55200	1148.4	69200	1148.7
55600	1148.4	69600	1148.7
56000	1148.4	70000	1148.7
56400	1148.4	70400	1148.7
56800	1148.4	70800	1148.7
57200	1148.4	71200	1148.8
57600	1148.5	71600	1148.8
58000	1148.5	72000	1148.8
58400	1148.5	72400	1148.8
58800	1148.5	72800	1148.8
59200	1148.5	73200	1148.8
59600	1148.5	73600	1148.8
60000	1148.5	74000	1148.8
60400	1148.5	74400	1148.8
60800	1148.5	74800	1148.8
61200	1148.5	75200	1148.8
61600	1148.6	75600	1148.8
62000	1148.6	76000	1148.8
62400	1148.6	76400	1148.8
62800	1148.6	76800	1148.8
63200	1148.6	77200	1148.8
63600	1148.6	77600	1148.9
64000	1148.6	78000	1148.9
64400	1148.6	78400	1148.9
64800	1148.6	78800	1148.9
65200	1148.6	79200	1148.9
65600	1148.6	79600	1148.9
66000	1148.7	80000	1148.9

APPLICABLE CONFIGURATIONS
All

BOEING PROPRIETARY
Export Controlled by ECCN 9E991

FUEL TANK QUANTITIES AND BALANCE ARMS (Continued)

LITERS (Continued)

CENTER TANK	
VOLUME L	B.A. IN.
80400	1148.9
80800	1148.9
81200	1148.9
81600	1148.9
82000	1148.9
82400	1148.9
82800	1148.9
83200	1148.9
83600	1148.8
84000	1148.8
84400	1148.8
84800	1148.8
85200	1148.8
85600	1148.7
86000	1148.7
86400	1148.7
86800	1148.7
87200	1148.6
87600	1148.6
88000	1148.6
88400	1148.5
88800	1148.5
89200	1148.4
89600	1148.4
90000	1148.3
90400	1148.3
90800	1148.2
91200	1148.2
91600	1148.1
92000	1148.1

CENTER TANK	
VOLUME L	B.A. IN.
92400	1148.0
92800	1148.0
93200	1147.9
93600	1147.8
94000	1147.8
94400	1147.7
94800	1147.6
95200	1147.5
95600	1147.5
96000	1147.4
96400	1147.3
96800	1147.2
97200	1147.1
97600	1147.0
98000	1147.0
98400	1146.9
98800	1146.8
99200	1146.7
99600	1146.6
100000	1146.5
100400	1146.5
100800	1146.5
101200	1146.5
101600	1146.5
102000	1146.4
102400	1146.4
102800	1146.4
103200	1146.4
103303	1146.4

APPLICABLE CONFIGURATIONS
All

BOEING PROPRIETARY
Export Controlled by ECCN 9E991

SYSTEM FLUIDS

ENGINE SYSTEM OIL (GENERAL ELECTRIC GE90-115B ENGINES)

The following table lists total engine system oil (including trapped oil):

FLUID CATEGORY		VOLUME		WEIGHT		B.A. IN.
	ENGINE	U.S. GAL.	L	LB	KG	
Drainable Oil	No. 1	9.5	36.0	78.9	35.8	994.0
	No. 2	9.4	35.6	78.0	35.4	997.5
	Total	18.9	71.6	156.9	71.2	995.7
Trapped Oil	No. 1	3.1	11.7	25.7	11.6	1046.6
	No. 2	3.1	11.7	25.7	11.6	1045.8
	Total	6.2	23.4	51.4	23.2	1046.2

NOTE Oil density used is 8.3 LB/U.S. GAL. (0.995 KG/L).

INTEGRATED DRIVE GENERATOR OIL

The following table lists the constant speed drive oil:

TANK LOCATION	VOLUME		WEIGHT		B.A. IN.
	U.S. GAL.	L	LB	KG	
No. 1	1.4	5.3	11.6	5.3	1050.5
No. 2	1.4	5.3	11.6	5.3	1051.3
Total	2.8	10.6	23.2	10.6	1050.9

NOTE Oil density used is 8.3 LB/U.S. GAL. (0.995 KG/L).

VARIABLE SPEED CONSTANT FREQUENCY GENERATOR OIL

The following table lists the variable speed constant frequency generator oil:

TANK LOCATION	VOLUME		WEIGHT		B.A. IN.
	U.S. GAL.	L	LB	KG	
No. 1	0.5	1.9	4.2	1.9	1030.4
No. 2	0.5	1.9	4.2	1.9	1031.2
Total	1.0	3.8	8.4	3.8	1030.8

NOTE Oil density used is 8.3 LB/U.S. GAL. (0.995 KG/L).

APPLICABLE CONFIGURATIONS
All

BOEING PROPRIETARY
Export Controlled by ECCN 9E991

SYSTEM FLUIDS (Continued)

HYDRAULIC SYSTEM FLUID

The following table provides the hydraulic system fluid totals:

FLUID CATEGORY	LOCATION	VOLUME		WEIGHT		B.A. IN.
		U.S.GAL.	L	LB	KG	
Hydraulic System Fluid	System Left	37.8	143.1	315.3	143.0	1459.9
	System Right	35.6	134.8	296.9	134.7	1398.5
	System Center	83.2	314.9	693.9	314.7	1374.3
	Total	156.6	592.8	1306.1	592.4	1400.5
Hydraulic Reservoir Fluid	System Left	7.4	28.0	61.7	28.0	1227.0
	System Right	7.4	28.0	61.7	28.0	1227.0
	System Center	11.2	42.4	93.4	42.4	1346.0
	Total	26.0	98.4	216.8	98.4	1278.3

NOTE Hydraulic fluid density used is 8.34 LB/U.S. GAL. (0.999 KG/L).

LANDING GEAR SYSTEM FLUID

The following table lists the landing gear system hydraulic fluid totals:

FLUID LOCATION	VOLUME		WEIGHT		B.A. IN.
	U.S. GAL.	L	LB	KG	
Nose Gear Oleo	7.6	28.8	55.1	25.0	110.5
Main Gear Oleo	35.4	134.0	256.7	116.4	1334.2

NOTE Oil density used is 7.25 LB/U.S. GAL. (0.869 KG/L).

OPERATING SYSTEM FLUID

The following table provides operating systems fluid totals:

SYSTEM	VOLUME		WEIGHT		B.A. IN.
	U.S. GAL.	L	LB	KG	
Pneumatic Starter Oil	0.4	1.5	3.3	1.5	1050.0
Aux. Power Unit Oil	2.9	11.0	24.1	10.9	2641.9

NOTE Oil density used is 8.3 LB/U.S. GAL. (0.995 KG/L).

APPLICABLE CONFIGURATIONS
All

BOEING PROPRIETARY
Export Controlled by ECCN 9E991

POTABLE WATER SYSTEM

TANK QUANTITIES AND LOCATIONS

The drinking, washing and lavatory rinse water system has three storage tanks per airplane. The total usable potable water and supply lines are listed in the table below.

SYSTEM	VOLUME		WEIGHT		B.A.
	U.S. GAL.	L	LB	KG	IN.
Water Tanks (2)	230.0	870.7	1918.2	870.1	2278.9
Water Tanks (1)	115.0	435.3	959.1	435.0	2272.9
Lines	9.0	34.1	75.1	34.1	1340.0
Total	354.0	1340.1	2952.4	1339.2	2253.1

NOTE Density used is 8.34 LB/U.S. GAL. (0.999 KG/L).

APPLICABLE CONFIGURATIONS
All

BOEING PROPRIETARY
Export Controlled by ECCN 9E991

WASTE DISPOSAL SYSTEM

TANK QUANTITIES AND LOCATIONS

The 777 utilizes a vacuum waste disposal system. An initial charge of disinfectant is located in each of the waste tanks listed below.

SYSTEM	VOLUME		WEIGHT		B.A. IN.
	U.S. GAL.	L	LB	KG	
Forward Tank	6.0	22.7	50.0	22.7	2142.0
Mid Tank	6.0	22.7	50.0	22.7	2178.0
Aft Tank	6.0	22.7	50.0	22.7	2212.0
Total	18.0	68.1	150.0	68.1	2177.3

NOTE Density used is 8.33 LB/U.S. GAL. (0.998 KG/L).

The following illustration provides locations of the lavatory flex zones.

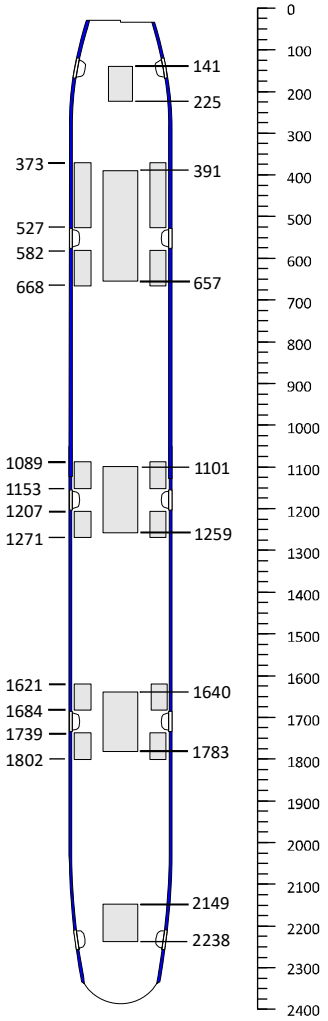

APPLICABLE CONFIGURATIONS
All

BOEING PROPRIETARY
Export Controlled by ECCN 9E991

PASSENGER AND PERSONNEL WEIGHT ALLOWANCES

FAA ADVISORY CIRCULAR 120-27 WEIGHT ALLOWANCES

Refer to the current release of FAA Advisory Circular 120-27 for guidance on the methods that may be used to determine passenger, crew and baggage weights.

Flight Crew Weight

For flight crew members:

- ❑ Determine using guidance in the current release of FAA Advisory Circular 120-27.

Cabin Crew Weight

For cabin attendants:

- ❑ Determine using guidance in the current release of FAA Advisory Circular 120-27.

Passengers Weight

- ❑ Determine using guidance in the current release of FAA Advisory Circular 120-27.

Baggage Weight

The following average weights apply to passenger checked baggage:

- ❑ Determine using guidance in the current release of FAA Advisory Circular 120-27.

CAUTION GALLEY, CLOSETS, AND LOWER HOLD CARGO LIMITATIONS THAT WERE DETERMINED USING THE PASSENGER, CREW, AND BAGGAGE WEIGHTS PROVIDED BY FAA ADVISORY CIRCULAR 120-27 REVISION E OR EARLIER MAY NEED TO BE RE-EVALUATED.

APPLICABLE CONFIGURATIONS
All

BOEING PROPRIETARY
Export Controlled by ECCN 9E991

INTERIOR ARRANGEMENT - MAIN DECK

FLIGHT DECK

The flight crew balance arms are defined as 6 IN. in front of the Seat Reference Point (SRP). The SRP is defined as the intersection of the seat bottom and the seat back. The crew locations represent the crew seated at takeoff positions.

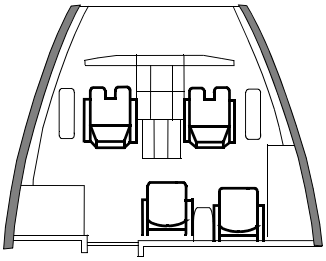

FLIGHT CREW (TWO OBSERVERS)	
LOCATION	**B.A. IN.**
Captain	-22
First Officer	-22
First Observer	19
Second Observer	26

APPLICABLE CONFIGURATIONS
Refer to the Interior Effectivity section of this manual to correlate certified Passenger Arrangements with specific aircraft serial numbers.

BOEING PROPRIETARY
Export Controlled by ECCN 9E991

INTERIOR ARRANGEMENT - MAIN DECK (Continued)

MAIN CABIN - 42C/385Y ARRANGEMENT

The main cabin 42C/385Y arrangement shown below is the basis for the subsequent passenger and cabin crew center of gravity data.

Reference Drawing(s):

LOPA 773-034

Galley Structure

Attendant Seat

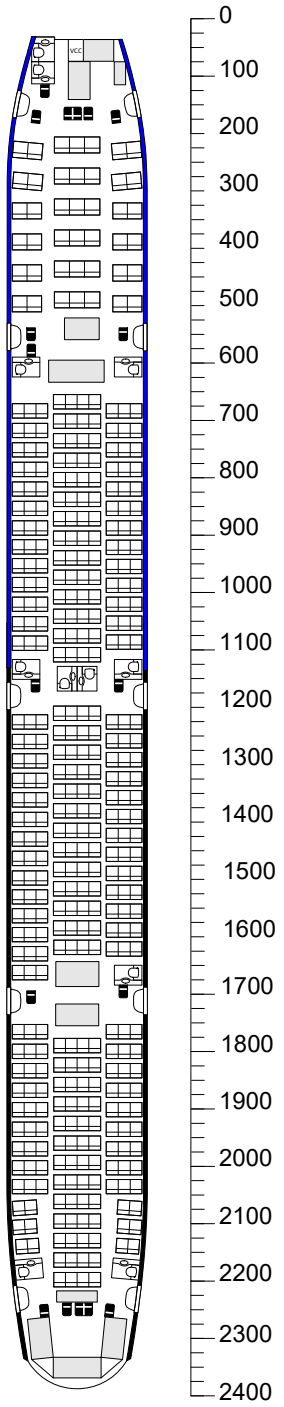

BALANCE
ARM – IN.

APPLICABLE CONFIGURATIONS
Refer to the Interior Effectivity section of this manual to correlate certified Passenger Arrangements with specific aircraft serial numbers.

BOEING PROPRIETARY
Export Controlled by ECCN 9E991

INTERIOR ARRANGEMENT - MAIN DECK (Continued)

Passenger Locations

The center of gravity of each passenger location for the main cabin arrangement on page 2 is listed in the following table. The class designations are as follows: First Class (F), Business Class (C) and Tourist Class (Y). Unless otherwise noted, the passenger balance arms are defined as 8 IN. aft of the forward seat pin, relative to the seat. The balance arms represent the passengers seated in an upright position.

CLASS	ROW	PASSENGERS					
		LEFT		CENTER		RIGHT	
		NO.	B.A. IN.	NO.	B.A. IN.	NO.	B.A. IN.
C	1	2	221	3	216	2	221
	2	2	275	3	270	2	275
	3	2	331	3	324	2	331
	4	2	385	3	378	2	385
	5	2	439	3	432	2	439
	6	2	493	3	486	2	493
Y	DOOR 2						
	8	3	681	4	665	3	681
	9	3	715	4	699	3	715
	10	3	749	4	733	3	749
	11	3	783	4	767	3	783
	12	3	817	4	801	3	817
	14	3	851	4	835	3	851
	15	3	885	4	869	3	885
	16	3	918	4	903	3	919
	17	3	951	4	937	3	952
	18	3	984	4	971	3	985
	19	3	1018	4	1005	3	1018
	20	3	1052	4	1039	3	1051
	21	3	1086	4	1073	3	1084
	22			4	1106		
	DOOR 3						
	23	3	1223	4	1208	3	1223
	24	3	1257	4	1242	3	1256
	25	3	1291	4	1276	3	1289
	26	3	1325	4	1310	3	1322
	27	3	1359	4	1344	3	1355
	28	3	1393	4	1378	3	1388
	29	3	1427	4	1412	3	1421
	30	3	1461	4	1446	3	1454
	31	3	1495	4	1480	3	1487
	32	3	1528	4	1514	3	1520
	33	3	1561	4	1548	3	1553
	34	3	1594	4	1582	3	1586
	35	3	1627	4	1616	3	1619
	36	3	1660				

APPLICABLE CONFIGURATIONS

Refer to the Interior Effectivity section of this manual to correlate certified Passenger Arrangements with specific aircraft serial numbers.

BOEING PROPRIETARY
Export Controlled by ECCN 9E991

INTERIOR ARRANGEMENT - MAIN DECK (Continued)

CLASS	ROW	PASSENGERS					
		LEFT		CENTER		RIGHT	
		NO.	B.A. IN.	NO.	B.A. IN.	NO.	B.A. IN.
	DOOR 4						
Y	37	3	1763			3	1763
	38	3	1797	4	1787	3	1797
	39	3	1831	4	1821	3	1831
	40	3	1865	4	1855	3	1865
	41	3	1899	4	1889	3	1899
	42	3	1933	4	1923	3	1933
	43	3	1967	4	1957	3	1967
	44	3	2000	4	1991	3	2000
	45	3	2033	4	2025	3	2033
	46	2	2070	4	2059	2	2070
	47	2	2103	4	2093	2	2103
	48	2	2137	4	2127	2	2137
	49			4	2161		
	50			4	2195		

Cabin Crew Locations

The cabin crew balance arms are defined as 6 IN. in front of the Seat Reference Point (SRP). The SRP is defined as the intersection of the seat bottom and the seat back. The cabin crew locations represent the crew seated at takeoff positions for the main cabin arrangement shown on page 2.

CABIN CREW			
GENERAL LOCATION	NUMBER OF ATTENDANTS		B.A. IN.
	LEFT	RIGHT	
Door 1	1		125
Door 1	2	1	166
Door 1	1	1	172
Door 2	1	1	549
Door 2	1		579
Door 3	1	1	1161
Door 4	1	1	1705
Door 5	1	2	2248
Door 5	1	1	2252

APPLICABLE CONFIGURATIONS
Refer to the Interior Effectivity section of this manual to correlate certified Passenger Arrangements with specific aircraft serial numbers.

BOEING PROPRIETARY
Export Controlled by ECCN 9E991

INTERIOR ARRANGEMENT - MAIN DECK (Continued)

MAIN CABIN - 42C/400Y ARRANGEMENT

The main cabin 42C/400Y arrangement shown below is the basis for the subsequent passenger and cabin crew center of gravity data.

Reference Drawing(s):

LOPA 773-049

Galley Structure

Attendant Seat

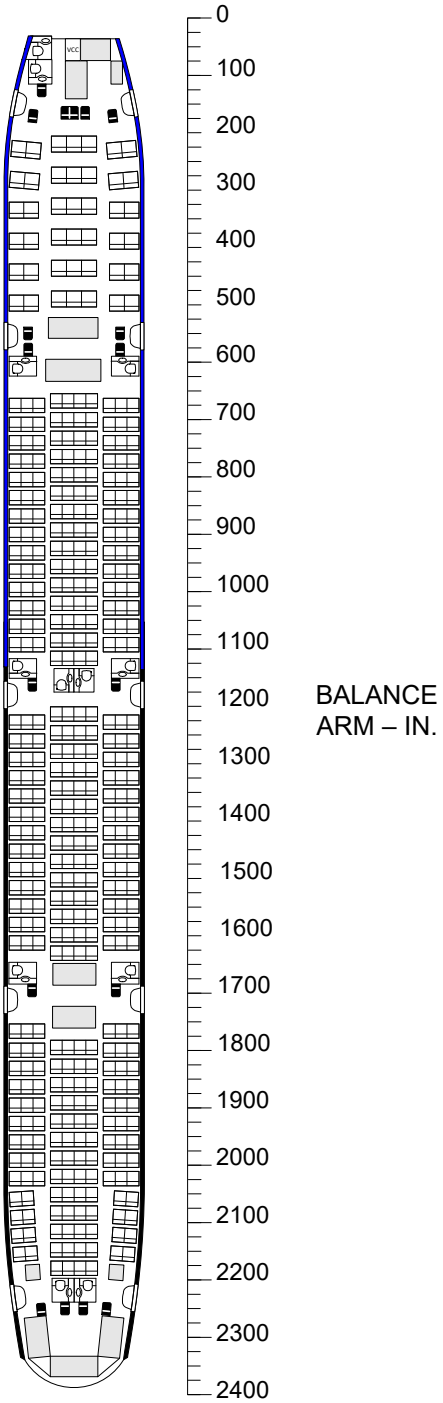

APPLICABLE CONFIGURATIONS
Refer to the Interior Effectivity section of this manual to correlate certified Passenger Arrangements with specific aircraft serial numbers.

BOEING PROPRIETARY
Export Controlled by ECCN 9E991

INTERIOR ARRANGEMENT - MAIN DECK (Continued)

Passenger Locations

The center of gravity of each passenger location for the main cabin arrangement on page 5 is listed in the following table. The class designations are as follows: First Class (F), Business Class (C) and Tourist Class (Y). Unless otherwise noted, the passenger balance arms are defined as 8 IN. aft of the forward seat pin, relative to the seat. The balance arms represent the passengers seated in an upright position.

CLASS	ROW	PASSENGERS					
		LEFT		CENTER		RIGHT	
		NO.	B.A. IN.	NO.	B.A. IN.	NO.	B.A. IN.
C	1	2	221	3	216	2	221
	2	2	275	3	270	2	275
	3	2	331	3	324	2	331
	4	2	385	3	378	2	385
	5	2	439	3	432	2	439
	6	2	493	3	486	2	493
Y	DOOR 2						
	7	3	673	4	665	3	673
	8	3	706	4	698	3	706
	9	3	738	4	730	3	738
	10	3	770	4	762	3	770
	11	3	802	4	794	3	802
	12	3	834	4	826	3	834
	14	3	866	4	858	3	866
	15	3	898	4	890	3	898
	16	3	930	4	922	3	930
	17	3	962	4	954	3	962
	18	3	994	4	986	3	994
	19	3	1026	4	1018	3	1026
	20	3	1058	4	1050	3	1058
	21	3	1090	4	1082	3	1090
	22			4	1114		
	DOOR 3						
	23	3	1225	4	1211	3	1225
	24	3	1258	4	1244	3	1258
	25	3	1290	4	1276	3	1290
	26	3	1322	4	1308	3	1322
	27	3	1354	4	1340	3	1354
	28	3	1386	4	1372	3	1386
	29	3	1418	4	1404	3	1418
	30	3	1450	4	1436	3	1450
	31	3	1482	4	1468	3	1482
	32	3	1514	4	1500	3	1514
	33	3	1546	4	1532	3	1546
	34	3	1578	4	1564	3	1578
	35	3	1610	4	1596	3	1610

APPLICABLE CONFIGURATIONS

Refer to the Interior Effectivity section of this manual to correlate certified Passenger Arrangements with specific aircraft serial numbers.

BOEING PROPRIETARY
Export Controlled by ECCN 9E991

INTERIOR ARRANGEMENT - MAIN DECK (Continued)

CLASS	ROW	PASSENGERS					
		LEFT		CENTER		RIGHT	
		NO.	B.A. IN.	NO.	B.A. IN.	NO.	B.A. IN.
Y	36			4	1628		
	DOOR 4						
	37	3	1764			3	1764
	38	3	1797	4	1792	3	1797
	39	3	1829	4	1825	3	1829
	40	3	1861	4	1857	3	1861
	41	3	1893	4	1889	3	1893
	42	3	1925	4	1921	3	1925
	43	3	1957	4	1953	3	1957
	44	3	1989	4	1985	3	1989
	45	3	2021	4	2017	3	2021
	46	2	2056	4	2049	2	2056
	47	2	2088	4	2081	2	2088
	48	2	2120	4	2113	2	2120
	49	2	2152	4	2145	2	2152
	50			4	2177		

Cabin Crew Locations

The cabin crew balance arms are defined as 6 IN. in front of the Seat Reference Point (SRP). The SRP is defined as the intersection of the seat bottom and the seat back. The cabin crew locations represent the crew seated at takeoff positions for the main cabin arrangement shown on page 5.

CABIN CREW			
GENERAL LOCATION	NUMBER OF ATTENDANTS		B.A. IN.
	LEFT	RIGHT	
Door 1	1		125
Door 1	2	1	166
Door 1	1	1	172
Door 2	1	1	549
Door 2	1	1	579
Door 3	1	1	1161
Door 4	1	1	1694
Door 5	1	1	2248
Door 5	1	1	2252

APPLICABLE CONFIGURATIONS
Refer to the Interior Effectivity section of this manual to correlate certified Passenger Arrangements with specific aircraft serial numbers.

BOEING PROPRIETARY
Export Controlled by ECCN 9E991

INTERIOR ARRANGEMENT - MAIN DECK (Continued)

MAIN CABIN - 33C/328Y ARRANGEMENT

The main cabin 33C/328Y arrangement shown below is the basis for the subsequent passenger and cabin crew center of gravity data.

Reference Drawing(s):

LOPA 773-070

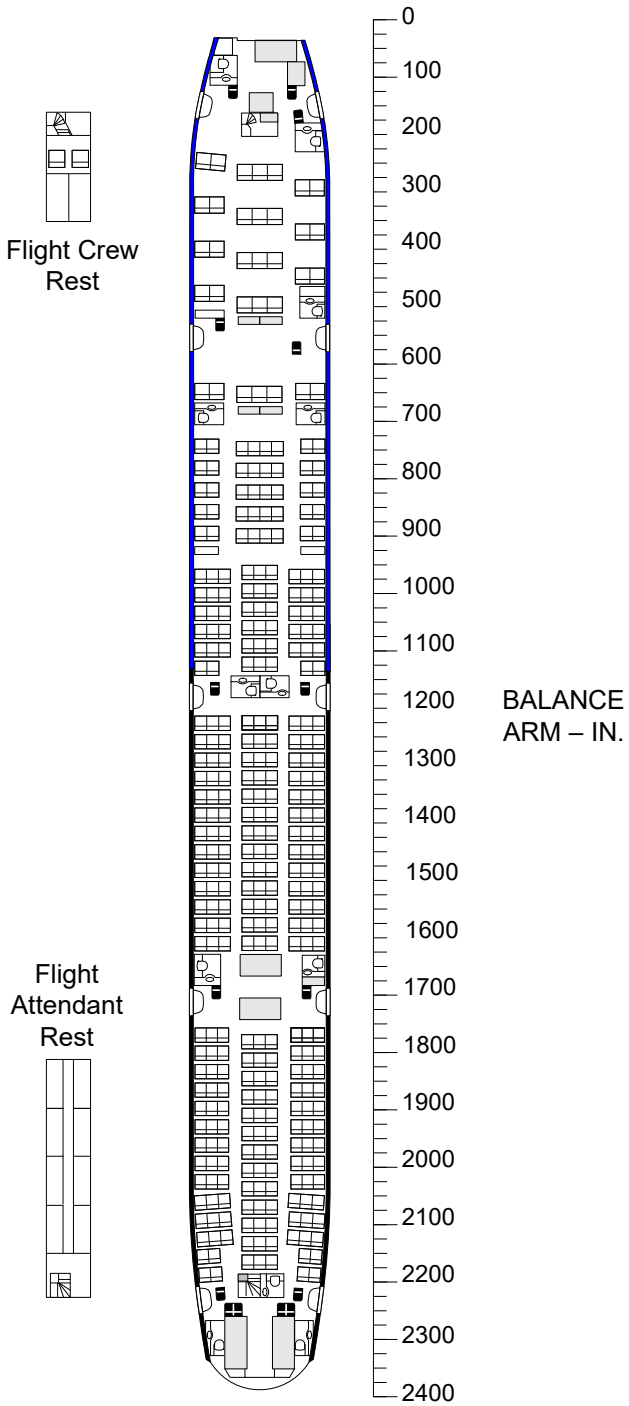

APPLICABLE CONFIGURATIONS
Refer to the Interior Effectivity section of this manual to correlate certified Passenger Arrangements with specific aircraft serial numbers.

BOEING PROPRIETARY
Export Controlled by ECCN 9E991

INTERIOR ARRANGEMENT - MAIN DECK (Continued)

Passenger Locations

The center of gravity of each passenger location for the main cabin arrangement on page 8 is listed in the following table. The class designations are as follows: First Class (F), Business Class (C) and Tourist Class (Y). Unless otherwise noted, the passenger balance arms are defined as 8 IN. aft of the forward seat pin, relative to the seat. The balance arms represent the passengers seated in an upright position.

CLASS	ROW	PASSENGERS					
		LEFT		CENTER		RIGHT	
		NO.	B.A. IN.	NO.	B.A. IN.	NO.	B.A. IN.
C	1	2	242	3	262	2	289
	2	2	319	3	339	2	366
	3	2	396	3	416	2	443
	4	2	473	3	493		
	DOOR 2						
	5	2	644	3	649	2	644
Y	10	2	741	4	745	2	741
	11	2	779	4	783	2	779
	12	2	817	4	821	2	817
	13	2	855	4	859	2	855
	14	3	893	4	897	3	893
	20	3	968	3	961	3	968
	21	3	1000	3	993	3	1000
	22	3	1032	3	1025	3	1032
	23	3	1064	3	1057	3	1064
	24	3	1096	3	1089	3	1096
	25	2	1128	3	1121	2	1128
	DOOR 3						
	26	3	1224	3	1223	3	1224
	27	3	1256	3	1255	3	1256
	28	3	1288	3	1287	3	1288
	29	3	1320	3	1319	3	1320
	30	3	1352	3	1351	3	1352
	31	3	1384	3	1383	3	1384
	32	3	1416	3	1415	3	1416
	33	3	1448	3	1447	3	1448
	34	3	1480	3	1479	3	1480
	35	3	1512	3	1511	3	1512
	36	3	1544	3	1543	3	1544
	37	3	1576	3	1575	3	1576
	38	3	1608	3	1607	3	1608
	DOOR 4						
	39	3	1767			3	1767
	40	3	1799	3	1779	3	1799
	41	3	1831	3	1811	3	1831
	42	3	1863	3	1843	3	1863

APPLICABLE CONFIGURATIONS

Refer to the Interior Effectivity section of this manual to correlate certified Passenger Arrangements with specific aircraft serial numbers.

BOEING PROPRIETARY
Export Controlled by ECCN 9E991

INTERIOR ARRANGEMENT - MAIN DECK (Continued)

CLASS	ROW	PASSENGERS					
		LEFT		CENTER		RIGHT	
		NO.	B.A. IN.	NO.	B.A. IN.	NO.	B.A. IN.
Y	43	3	1895	3	1875	3	1895
	44	3	1927	3	1907	3	1927
	45	3	1959	3	1939	3	1959
	46	3	1991	3	1971	3	1991
	47	3	2023	3	2003	3	2023
	48	3	2058	3	2035	3	2058
	49	3	2089	3	2067	3	2089
	50	3	2121	3	2099	3	2121
	51	2	2153	3	2131	2	2153
	52	2	2185	3	2163	2	2185

Cabin Crew Locations

The cabin crew balance arms are defined as 6 IN. in front of the Seat Reference Point (SRP). The SRP is defined as the intersection of the seat bottom and the seat back. The cabin crew locations represent the crew seated at takeoff positions for the main cabin arrangement shown on page 8.

CABIN CREW			
GENERAL LOCATION	NUMBER OF ATTENDANTS		B.A. IN.
	LEFT	RIGHT	
Door 1	1	1	125
Door 1		1	170
Door 2	1		530
Door 2		1	573
Door 3	1	1	1166
Door 4	1	1	1694
Door 5	1	1	2221
Door 5	2	2	2249

APPLICABLE CONFIGURATIONS
Refer to the Interior Effectivity section of this manual to correlate certified Passenger Arrangements with specific aircraft serial numbers.

BOEING PROPRIETARY
Export Controlled by ECCN 9E991

INTERIOR ARRANGEMENT - MAIN DECK (Continued)

MAIN CABIN - 18F/40C/384Y ARRANGEMENT

The main cabin 18F/40C/384Y arrangement shown below is the basis for the subsequent passenger and cabin crew center of gravity data.

Reference Drawing(s):

LOPA 773-075

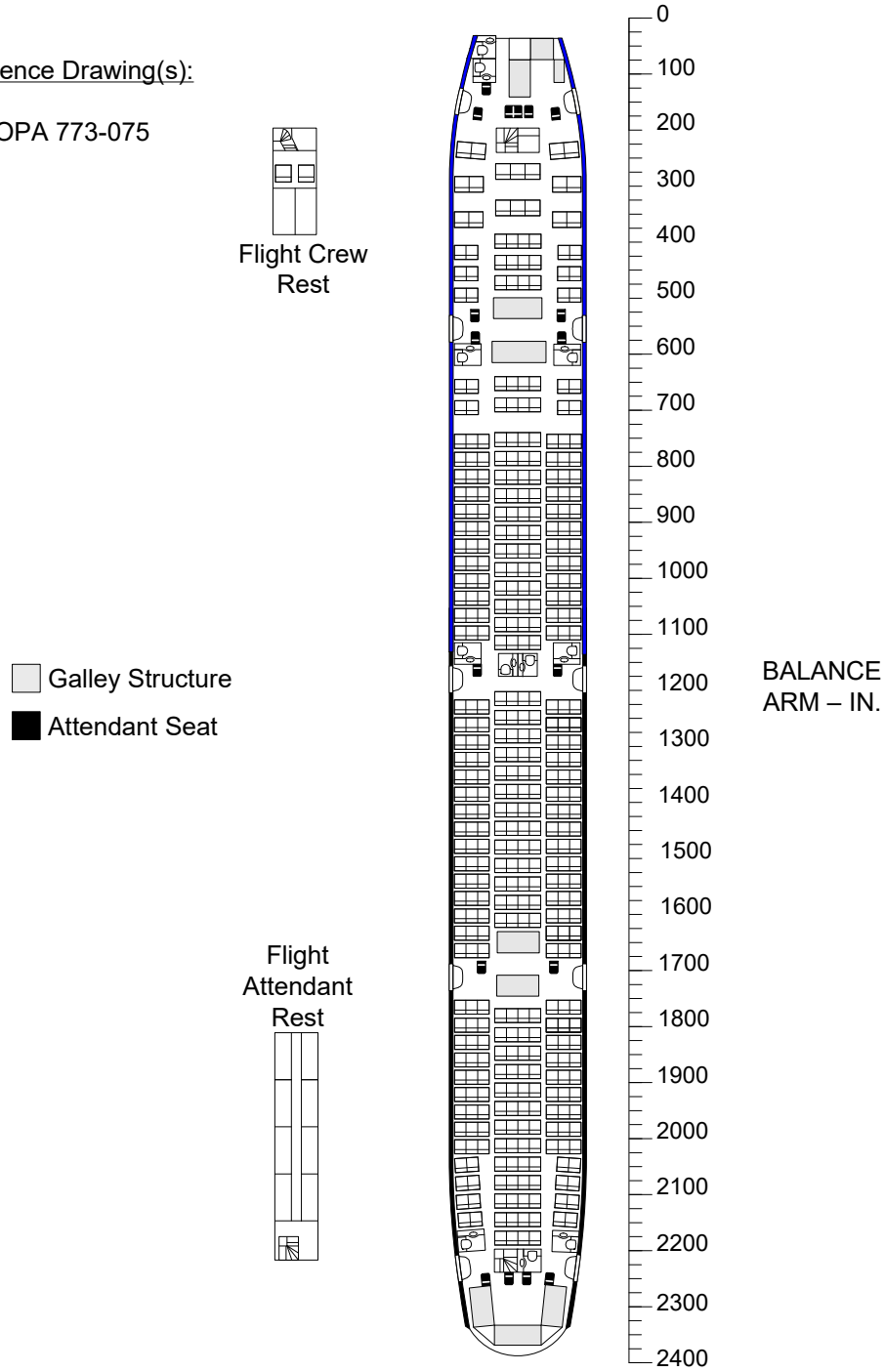

APPLICABLE CONFIGURATIONS
Refer to the Interior Effectivity section of this manual to correlate certified Passenger Arrangements with specific aircraft serial numbers.

BOEING PROPRIETARY
Export Controlled by ECCN 9E991

INTERIOR ARRANGEMENT - MAIN DECK (Continued)

Passenger Locations

The center of gravity of each passenger location for the main cabin arrangement on page 11 is listed in the following table. The class designations are as follows: First Class (F), Business Class (C) and Tourist Class (Y). Unless otherwise noted, the passenger balance arms are defined as 8 IN. aft of the forward seat pin, relative to the seat. The balance arms represent the passengers seated in an upright position.

CLASS	ROW	PASSENGERS					
		LEFT		CENTER		RIGHT	
		NO.	B.A. IN.	NO.	B.A. IN.	NO.	B.A. IN.
C	1	2	230	3	270	2	230
	2	2	293	3	335	2	293
	3	2	356			2	356
Y	4	2	416	4	396	2	416
	5	2	454	4	434	2	454
	6	2	492	4	472	2	492
	DOOR 2						
	7	2	655	4	650	2	655
	8	2	693	4	688	2	693
	10	3	753	4	750	3	753
	11	3	785	4	784	3	785
	12	3	816	4	817	3	816
	14	3	847	4	850	3	847
	15	3	878	4	883	3	878
	16	3	909	4	916	3	909
	17	3	940	4	949	3	940
	18	3	971	4	982	3	971
	19	3	1002	4	1015	3	1002
	20	3	1033	4	1048	3	1033
	21	3	1064	4	1080	3	1064
	22	3	1095	4	1112	3	1095
	DOOR 3						
	23	3	1227	4	1212	3	1227
	24	3	1259	4	1246	3	1259
	25	3	1290	4	1279	3	1290
	26	3	1321	4	1312	3	1321
	27	3	1352	4	1345	3	1352
	28	3	1383	4	1378	3	1383
	29	3	1414	4	1411	3	1414
	30	3	1445	4	1444	3	1445
	31	3	1476	4	1477	3	1476
	32	3	1507	4	1510	3	1507
	33	3	1538	4	1543	3	1538
	34	3	1569	4	1576	3	1569
	35	3	1600	4	1608	3	1600
	36	3	1631			3	1631

APPLICABLE CONFIGURATIONS
Refer to the Interior Effectivity section of this manual to correlate certified Passenger Arrangements with specific aircraft serial numbers.

BOEING PROPRIETARY
Export Controlled by ECCN 9E991

INTERIOR ARRANGEMENT - MAIN DECK (Continued)

CLASS	ROW	PASSENGERS					
		LEFT		CENTER		RIGHT	
		NO.	B.A. IN.	NO.	B.A. IN.	NO.	B.A. IN.
Y	37	3	1662			3	1662
	DOOR 4						
	38	3	1763	4	1778	3	1763
	39	3	1795	4	1812	3	1795
	40	3	1826	4	1845	3	1826
	41	3	1857	4	1878	3	1857
	42	3	1888	4	1911	3	1888
	43	3	1919	4	1944	3	1919
	44	3	1950	4	1977	3	1950
	45	3	1981	4	2010	3	1981
	46	3	2012	4	2043	3	2012
	47	2	2045	4	2076	2	2045
	48	2	2078	4	2109	2	2078
	49	2	2110	4	2142	2	2110
	50	2	2142	4	2175	2	2142

Cabin Crew Locations

The cabin crew balance arms are defined as 6 IN. in front of the Seat Reference Point (SRP). The SRP is defined as the intersection of the seat bottom and the seat back. The cabin crew locations represent the crew seated at takeoff positions for the main cabin arrangement shown on page 11.

CABIN CREW			
GENERAL LOCATION	NUMBER OF ATTENDANTS		B.A. IN.
	LEFT	RIGHT	
Door 1	1		125
Door 1	2	1	168
Door 1	1	1	172
Door 2	1	1	530
Door 2	1	1	572
Door 3	1	1	1163
Door 4	1	1	1693
Door 5	1	1	2249
Door 5	1	1	2252

APPLICABLE CONFIGURATIONS
Refer to the Interior Effectivity section of this manual to correlate certified Passenger Arrangements with specific aircraft serial numbers.

BOEING PROPRIETARY
Export Controlled by ECCN 9E991

GALLEY WEIGHTS - FIXED POSITIONS

MAXIMUM ALLOWABLE WEIGHTS - DOOR 1

Door 1 galley configurations are shown in the following illustrations.

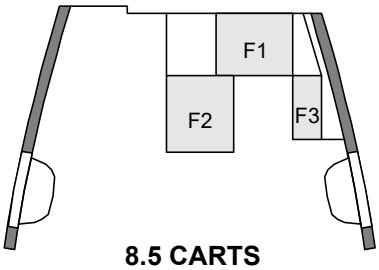

8.5 CARTS

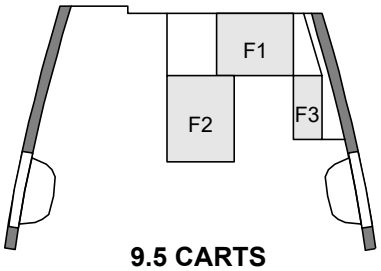

9.5 CARTS

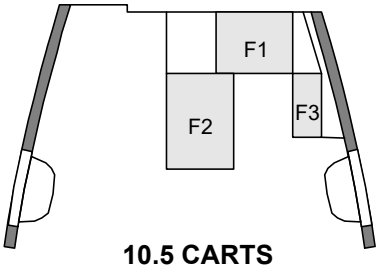

10.5 CARTS

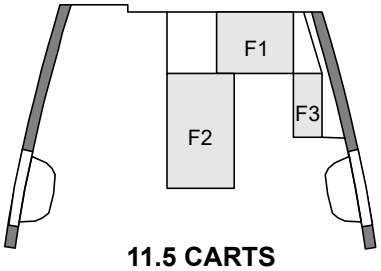

11.5 CARTS

Door 1 galley weights listed below are the maximum allowable weights that can be sustained by the basic monocoque structure for each galley configuration shown above.

MAXIMUM ALLOWABLE GALLEY WEIGHTS								
NUMBER OF CARTS	F1		F2		F3		TOTAL COMPLEX	
	LB	KG	LB	KG	LB	KG	LB	KG
8.5	2500	1133	1900	861	600	272	5000	2267
9.5	2500	1133	2400	1088	600	272	5500	2494
10.5	2500	1133	2900	1315	600	272	6000	2721
11.5	2500	1133	3400	1542	600	272	6200	2812

NOTE Galleys installed on this airplane may be further limited by the carrier and contents weight as shown on the galley capacity placards.

APPLICABLE CONFIGURATIONS
D

BOEING PROPRIETARY
Export Controlled by ECCN 9E991

GALLEY WEIGHTS - FIXED POSITIONS

MAXIMUM ALLOWABLE WEIGHTS - DOOR 1

Door 1 galley configurations are shown in the following illustrations.

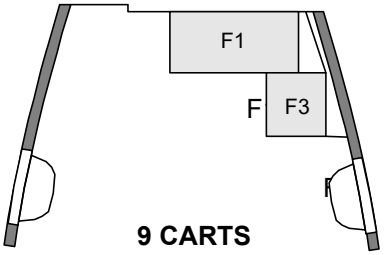

Door 1 galley weights listed below are the maximum allowable weights that can be sustained by the basic monocoque structure for the galley configuration shown above.

MAXIMUM ALLOWABLE GALLEY WEIGHTS						
NUMBER OF CARTS	F1		F3		TOTAL COMPLEX	
	LB	KG	LB	KG	LB	KG
9	2700	1224	1400	635	4100	1859

NOTE Galleys installed on this airplane may be further limited by the carrier and contents weight as shown on the galley capacity placards.

APPLICABLE CONFIGURATIONS
C

BOEING PROPRIETARY
Export Controlled by ECCN 9E991

GALLEY WEIGHTS - FIXED POSITIONS

MAXIMUM ALLOWABLE WEIGHTS - DOOR 1

Door 1 galley configuration is shown in the following illustration.

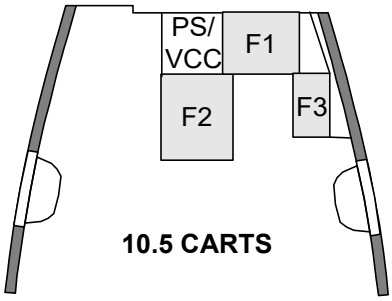

Door 1 galley weights listed below are the maximum allowable weights that can be sustained by the basic monocoque structure for the galley configuration shown above.

MAXIMUM ALLOWABLE GALLEY WEIGHTS								
NUMBER OF CARTS	F1		F2		F3		TOTAL COMPLEX	
	LB	KG	LB	KG	LB	KG	LB	KG
10.5	1500	680	2900	1315	600	272	5000	2267

NOTES
- Galleys installed on this airplane may be further limited by the carrier and contents weight as shown on the galley capacity placards.
- Purser Work Station/VCC not to exceed 1200 LB (544 KG)

APPLICABLE CONFIGURATIONS
A, B, E, F

BOEING PROPRIETARY
Export Controlled by ECCN 9E991

GALLEY WEIGHTS - FIXED POSITIONS

MAXIMUM ALLOWABLE WEIGHTS - DOOR 5

Door 5 galley configuration is shown in the following illustration.

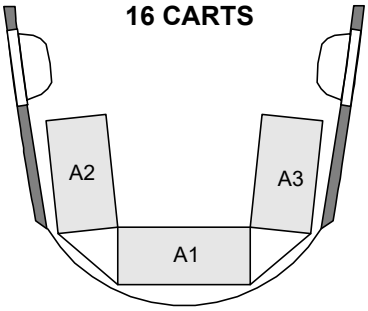

Door 5 galley weights listed below are the maximum allowable weights that can be sustained by the basic monocoque structure for the galley configuration shown above.

MAXIMUM ALLOWABLE GALLEY WEIGHTS								
NUMBER OF CARTS	A1		A2		A3		TOTAL COMPLEX	
	LB	KG	LB	KG	LB	KG	LB	KG
16	3000	1360	2700	1224	2700	1224	8400	3808

NOTE Galleys installed on this airplane may be further limited by the carrier and contents weight as shown on the galley capacity placards.

APPLICABLE CONFIGURATIONS
A, D, F

BOEING PROPRIETARY
Export Controlled by ECCN 9E991

GALLEY WEIGHTS - FIXED POSITIONS

MAXIMUM ALLOWABLE WEIGHTS - DOOR 5

Door 5 galley configuration is shown in the following illustration.

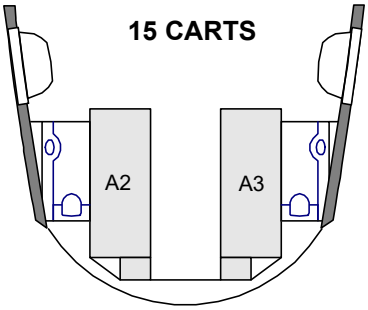

Door 5 galley weights listed below are the maximum allowable weights that can be sustained by the basic monocoque structure for the galley configuration shown above.

MAXIMUM ALLOWABLE GALLEY WEIGHTS								
NUMBER OF CARTS	AFT PANEL		A2		A3		TOTAL COMPLEX	
	LB	KG	LB	KG	LB	KG	LB	KG
15	300	136	4350	1973	4350	1973	9000	4082

NOTE Galleys installed on this airplane may be further limited by the carrier and contents weight as shown on the galley capacity placards.

APPLICABLE CONFIGURATIONS
C

BOEING PROPRIETARY
Export Controlled by ECCN 9E991

GALLEY WEIGHTS - FIXED POSITIONS

MAXIMUM ALLOWABLE WEIGHTS - DOOR 5

Door 5 galley configuration is shown in the following illustration.

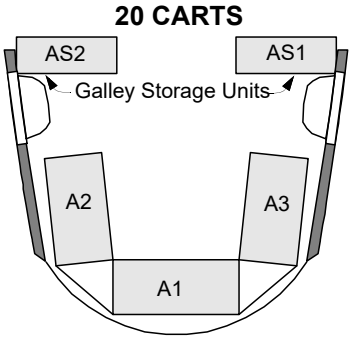

Door 5 galley weights listed below are the maximum allowable weights that can be sustained by the basic monocoque structure for the galley configuration shown above.

MAXIMUM ALLOWABLE GALLEY WEIGHTS												
NUMBER OF CARTS	A1		A2		A3		STORAGE RIGHT		STORAGE LEFT		TOTAL COMPLEX	
	LB	KG	LB	KG	LB	KG	LB	KG	LB	KG	LB	KG
20	3000	1360	2700	1224	2700	1224	670	303	670	303	9740	4414

NOTE Galleys installed on this airplane may be further limited by the carrier and contents weight as shown on the galley capacity placards.

APPLICABLE CONFIGURATIONS
B, E

BOEING PROPRIETARY
Export Controlled by ECCN 9E991

GALLEY WEIGHTS - FLEX ZONES

MAXIMUM ALLOWABLE WEIGHTS

The flexible galley zones are presented in the following figure. In the table that follows, the flex zones are referred to as: Door 1, Door 2 Centerline, Door 2 Side, Door 4 Centerline, Door 4 Side and Door 5.

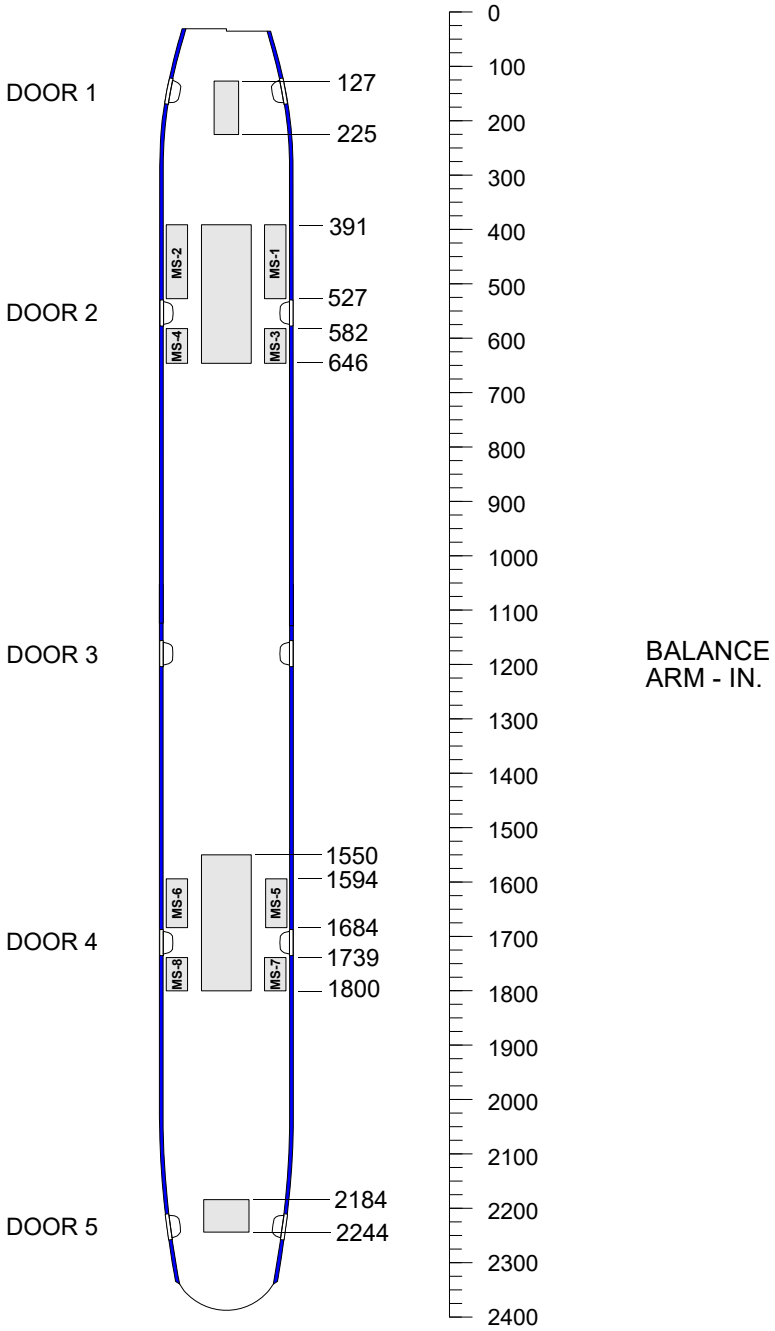

APPLICABLE CONFIGURATIONS
A, B, E, F

BOEING PROPRIETARY
Export Controlled by ECCN 9E991

GALLEY WEIGHTS - FLEX ZONES (Continued)

The flexible zone galley weights listed in the following table are the maximum allowable weights that can be sustained by the floor and monocoque structure.

MAXIMUM ALLOWABLE GALLEY WEIGHTS					
FLEX ZONE	NUMBER OF CARTS	LOADS FROM	MAXIMUM WEIGHT		NUMBER OF GALLEYS ALLOWED
			LB	KG	
Door 1[a]	3 Full	Fwd	2070	938	1
	3 Half	Fwd	1200	544	1
Door 2 Centerline[b][c]	5 Full	Fwd/Aft	3000	1360	3
	6 Full	Fwd/Aft	3200	1451	3
	7 Full[d][e]	Fwd/Aft	3400	1542	3
	7 Full[f]	Fwd/Aft	4000	1814	3
	5 Half	Fwd/Aft	1700	771	3
	6 Half	Fwd/Aft	1800	816	3
Door 2 Side	2 Full	Fwd/Aft	1000	453	2[g]
	2 Full	Aisle	1150	521	[h]
	3 Full	Aisle	1400	635	[h]
	4 Full	Aisle	1800	816	2
	5 Full	Aisle	2200	997	2[g]
	6 Full	Aisle	2800	1270	2[g]
Door 4 Centerline[b][c]	5 Full	Fwd/Aft	3000	1360	3
	5 Half	Fwd/Aft	1700	771	3
Door 4 Side	2 Full	Fwd/Aft	1000	453	2[g]
	2 Full	Aisle	1150	521	[i]
	3 Full	Aisle	1400	635	[i]
	4 Full	Aisle	1800	816	2
	5 Full	Aisle	2200	997	2[g]
	6 Full	Aisle	2800	1270	2[g]
Door 5 Centerline[a]	2 Full	Aisle	1660	752	1
	3 Full	Aisle	1840	834	1
	4 Full	Aisle	2700	1224	1
	6 Full	Aisle	3820	1732	1
	3 Full	Aft	1600	725	1
	5 Full	Aft	3000	1360	1
	6 Full	Aft	3200	1451	1
	5 Half	Aft	1700	771	1
	6 Half	Aft	1800	816	1

[a] A maximum of one galley is allowed in this flex zone.
[b] Any single or combination of 2 or 3 galleys.
[c] Centerline galleys cannot be arranged back to back.
[d] Maximum weight with galley integral floors and cart mushrooms.

APPLICABLE CONFIGURATIONS
A, B, E, F

BOEING PROPRIETARY
Export Controlled by ECCN 9E991

GALLEY WEIGHTS - FLEX ZONES (Continued)

[e] Centerline complex weight may be limited by the side galley arrangement. See door 2 side galley cart limit table.
[f] Maximum centerline complex galley weight is 10200 LB (4626 KG).
[g] One galley per side of airplane.
[h] Any single or combination allowed by Door 2 Side Galley Cart Limit Table and the weight limits of that combination.
[i] Any single or combination allowed by Door 4 Side Galley Cart Limit Table and the weight limits of that combination.

NOTES
- Galleys installed on this airplane may be further limited by the carrier and contents weight as shown on the galley capacity placards.
- Purser stations weighing 1000 pounds or more are considered as galleys when installed in the galley flex zones. They must comply with galley weight limits and be counted in the number of galleys allowed.

The Door 2 and Door 4 side galley zone weights listed in the following table are the maximum allowable weights that can be sustained by the floor and monocoque structure.

MAXIMUM ALLOWABLE DOOR 2 AND DOOR 4 SIDE GALLEY ZONE WEIGHTS		
ZONES	**LB EACH**	**KG EACH**
Forward Zones	2800	1270
Aft Zones	1800	816
Combined Side Zones[a]	2800	1270

[a] Each side of airplane.

APPLICABLE CONFIGURATIONS
A, B, E, F

BOEING PROPRIETARY
Export Controlled by ECCN 9E991

GALLEY WEIGHTS - FLEX ZONES (Continued)

The Door 2 side galley cart limits listed in the following table are the maximum that can be sustained by the floor and monocoque structure.

DOOR 2 SIDE GALLEY CART LIMITS									
CENTERLINE GALLEY WEIGHTS		ALLOWED SIDE GALLEY SIZE - NUMBER OF FULL CARTS[a]					MAXIMUM NUMBER OF CARTS[a]		
		MS-1	MS-2	MS-3	MS-4	TOTAL	FWD ZONES	AFT ZONES	SIDE ZONES
LB	KG	CARTS /ZONE	CARTS /ZONE	CARTS /ZONE	CARTS /ZONE	CARTS /APL	CARTS /APL	CARTS /APL	CARTS /APL
4000	1814	0	0	0	0	0	0	0	0
3400	1542	2	2	2	2	8	4	4	4
3200	1451	3	3	3	3	6	6	6	3
3000	1360	3	3	3	3	12	6	6	6
3000	1360	4	4	4	4	12	8	8	6
3000	1360	5	5	0	0	10	10	0	5
3000	1360	6	6	0	0	12	12	0	6
1700	771	[b]	[b]	[b]	[b]	[b]	[b]	[b]	[b]
1800	816	[b]	[b]	[b]	[b]	[b]	[b]	[b]	[b]

[a] Determine allowed side galley size using heaviest installed centerline galley.
[b] Number of side galley carts allowed is the same as the 3000 LB (1360 KG) centerline galley.

NOTE Lower weight centerline galleys are allowed the configurations of the higher weight centerline galleys.

APPLICABLE CONFIGURATIONS
A, B, E, F

BOEING PROPRIETARY
Export Controlled by ECCN 9E991

GALLEY WEIGHTS - FLEX ZONES (Continued)

The Door 4 side galley cart limits listed in the following table are the maximum that can be sustained by the floor and monocoque structure.

DOOR 4 SIDE GALLEY CART LIMITS									
CENTERLINE GALLEY WEIGHTS		ALLOWED SIDE GALLEY SIZE - NUMBER OF CARTS[a]					MAXIMUM NUMBER OF CARTS[a]		
		MS-5	MS-6	MS-7	MS-8	TOTAL	FWD ZONES	AFT ZONES	SIDE ZONES
LB	KG	CARTS /ZONE	CARTS /ZONE	CARTS /ZONE	CARTS /ZONE	CARTS /APL	CARTS /APL	CARTS /APL	CARTS /APL
3000	1360	2	2	2	2	8	4	4	4
3000	1360	3	3	3	3	12	6	6	6
3000	1360	4	4	4	4	12	8	8	6
3000	1360	5	5	0	0	10	10	0	5
3000	1360	6	6	0	0	12	12	0	6
1700	771	[b]	[b]	[b]	[b]	[b]	[b]	[b]	[b]

[a] Determine allowed side galley size using heaviest installed centerline galley.
[b] Number of side galley carts allowed is the same as the 3000 LB (1360 KG) centerline galley.

NOTE Lower weight centerline galleys are allowed the configurations of the higher weight centerline galleys.

APPLICABLE CONFIGURATIONS
A, B, E, F

BOEING PROPRIETARY
Export Controlled by ECCN 9E991

GALLEY WEIGHTS - FLEX ZONES

MAXIMUM ALLOWABLE WEIGHTS

The flexible galley zones are presented in the following figure. In the table that follows, the flex zones are referred to as: Door 2 Centerline, Door 2 Side, Door 4 Centerline and Door 4 Side.

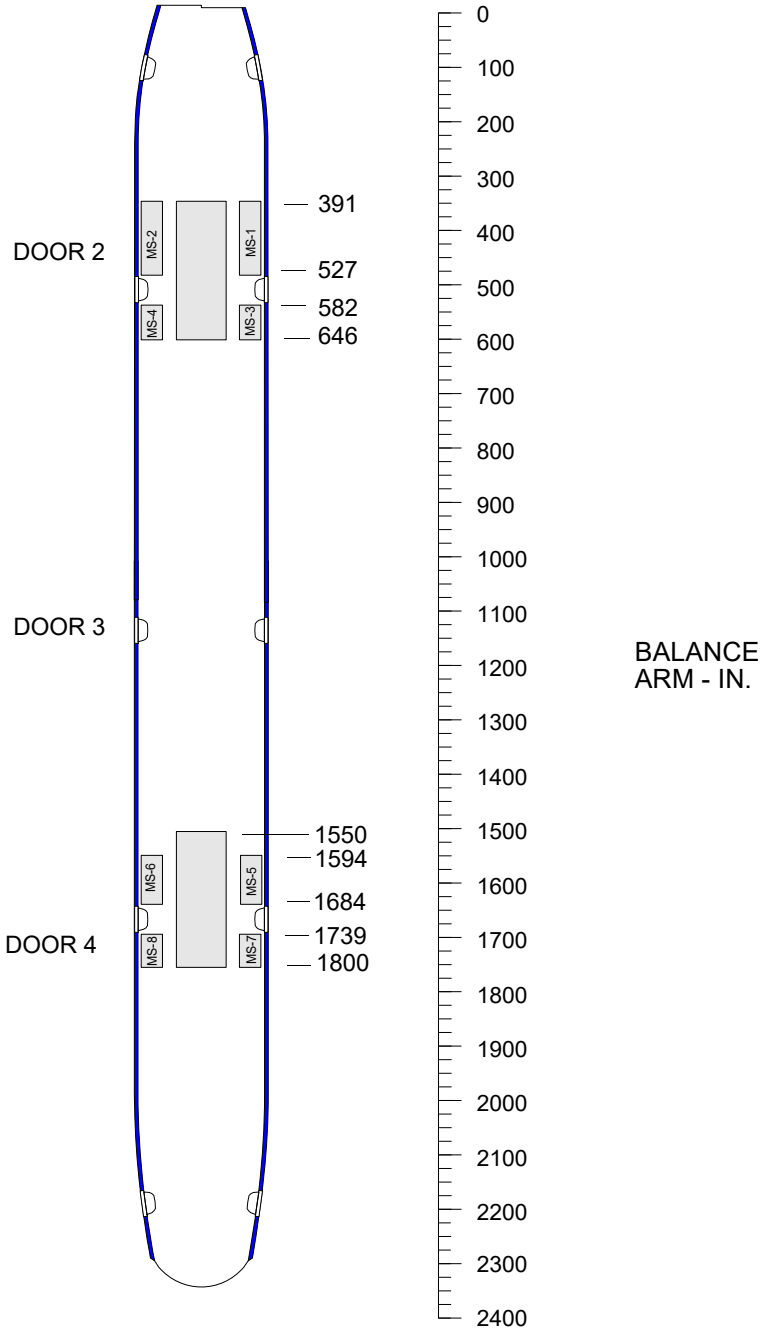

APPLICABLE CONFIGURATIONS
D

BOEING PROPRIETARY
Export Controlled by ECCN 9E991

GALLEY WEIGHTS - FLEX ZONES (Continued)

The flexible zone galley weights listed in the following table are the maximum allowable weights that can be sustained by the floor and monocoque structure.

MAXIMUM ALLOWABLE GALLEY WEIGHTS					
FLEX ZONE	NUMBER OF CARTS	LOADS FROM	MAXIMUM WEIGHT		NUMBER OF GALLEYS ALLOWED
			LB	KG	
Door 2 Centerline[a][b]	5 Full	Fwd/Aft	3000	1360	3
	7 Full[c][d]	Fwd/Aft	3400	1542	3
	7 Full[e]	Fwd/Aft	4000	1814	3
	5 Half	Fwd/Aft	1700	771	3
Door 2 Side	2 Full	Fwd/Aft	1000	453	2[f]
	2 Full	Aisle	1150	521	[g]
	3 Full	Aisle	1400	635	[g]
	4 Full	Aisle	1800	816	2
	5 Full	Aisle	2200	997	2[h]
	6 Full	Aisle	2800	1270	2[h]
Door 4 Centerline[a][b]	5 Full	Fwd/Aft	3000	1360	3
	5 Half	Fwd/Aft	1700	771	3
Door 4 Side	2 Full	Fwd/Aft	1000	453	2[h]
	2 Full	Aisle	1150	521	[h]
	3 Full	Aisle	1400	635	[h]
	4 Full	Aisle	1800	816	2
	5 Full	Aisle	2200	997	2[f]
	6 Full	Aisle	2800	1270	2[f]

[a] Any single or combination of 2 or 3 galleys.
[b] Centerline galleys cannot be arranged back to back.
[c] Maximum weight with galley integral floors and cart mushrooms.
[d] Centerline complex weight may be limited by the side galley arrangement. See door 2 side galley cart limit table.
[e] Maximum centerline complex galley weight is 10200 LB (4626 KG).
[f] One galley per side of airplane.
[g] Any single or combination allowed by Door 2 Side Galley Cart Limit Table and the weight limits of that combination.
[h] Any single or combination allowed by Door 4 Side Galley Cart Limit Table and the weight limits of that combination.

APPLICABLE CONFIGURATIONS
D

BOEING PROPRIETARY
Export Controlled by ECCN 9E991

GALLEY WEIGHTS - FLEX ZONES (Continued)

NOTES
- Galleys installed on this airplane may be further limited by the carrier and contents weight as shown on the galley capacity placards.
- Purser stations weighing 1000 pounds or more are considered as galleys when installed in the galley flex zones. They must comply with galley weight limits and be counted in the number of galleys allowed.

The Door 2 and Door 4 side galley zone weights listed in the following table are the maximum allowable weights that can be sustained by the floor and monocoque structure.

MAXIMUM ALLOWABLE DOOR 2 AND DOOR 4 SIDE GALLEY ZONE WEIGHTS		
ZONES	LB EACH	KG EACH
Forward Zones	2800	1270
Aft Zones	1800	816
Combined Side Zones[a]	2800	1270

[a] Each side of airplane.

The Door 2 side galley cart limits listed in the following table are the maximum that can be sustained by the floor and monocoque structure.

DOOR 2 SIDE GALLEY CART LIMITS									
CENTERLINE GALLEY WEIGHT		ALLOWED SIDE GALLEY SIZE - NUMBER OF CARTS[a]					MAXIMUM NUMBER OF CARTS[a]		
		MS-1	MS-2	MS-3	MS-4	TOTAL	FWD ZONES	AFT ZONES	SIDE ZONES
LB	KG	CARTS /ZONE	CARTS /ZONE	CARTS /ZONE	CARTS /ZONE	CARTS /APL	CARTS /APL	CARTS /APL	CARTS /APL
4000	1814	0	0	0	0	0	0	0	0
3400	1542	2	2	2	2	8	4	4	4
3000	1360	2	2	2	2	8	4	4	4
3000	1360	3	3	3	3	12	6	6	6
3000	1360	4	4	4	4	12	8	8	6
3000	1360	5	5	0	0	10	10	0	5
3000	1360	6	6	0	0	12	12	0	6
1700	771	[b]	[b]	[b]	[b]	[b]	[b]	[b]	[b]

[a] Determine allowed side galley size using heaviest installed centerline galley.
[b] Number of side galley carts allowed is the same as the 3000 LB (1360 KG) centerline galley.

NOTE Lower weight centerline galleys are allowed the configurations of the higher weight centerline galleys.

APPLICABLE CONFIGURATIONS
D

BOEING PROPRIETARY
Export Controlled by ECCN 9E991

GALLEY WEIGHTS - FLEX ZONES (Continued)

The Door 4 side galley cart limits listed in the following table are the maximum that can be sustained by the floor and monocoque structure.

DOOR 4 SIDE GALLEY CART LIMITS									
CENTERLINE GALLEY WEIGHT		ALLOWED SIDE GALLEY SIZE - NUMBER OF CARTS[a]					MAXIMUM NUMBER OF CARTS[a]		
		MS-5	MS-6	MS-7	MS-8	TOTAL	FWD ZONES	AFT ZONES	SIDE ZONES
LB	KG	CARTS /ZONE	CARTS /ZONE	CARTS /ZONE	CARTS /ZONE	CARTS /APL	CARTS /APL	CARTS /APL	CARTS /APL
3000	1360	2	2	2	2	8	4	4	4
3000	1360	3	3	3	3	12	6	6	6
3000	1360	4	4	4	4	12	8	8	6
3000	1360	5	5	0	0	10	10	0	5
3000	1360	6	6	0	0	12	12	0	6
1700	771	[b]	[b]	[b]	[b]	[b]	[b]	[b]	[b]

[a] Determine allowed side galley size using heaviest installed centerline galley.
[b] Number of side galley carts allowed is the same as the 3000 LB (1360 KG) centerline galley.

NOTE Lower weight centerline galleys are allowed the configurations of the higher weight centerline galleys

APPLICABLE CONFIGURATIONS
D

BOEING PROPRIETARY
Export Controlled by ECCN 9E991

GALLEY WEIGHTS - FLEX ZONES

MAXIMUM ALLOWABLE WEIGHTS

The flexible galley zones are presented in the following figure. In the table that follows, the flex zones are referred to as: Door 2 Centerline, Door 2 Side, Door 4 Centerline and Door 4 Side.

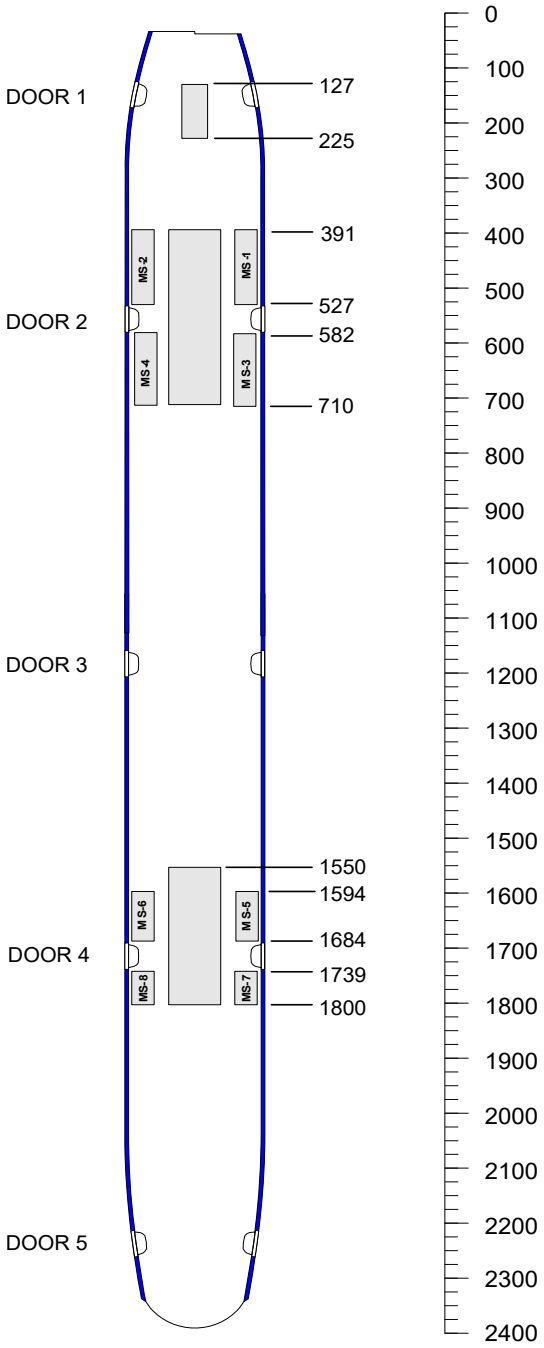

APPLICABLE CONFIGURATIONS
C

BOEING PROPRIETARY
Export Controlled by ECCN 9E991

GALLEY WEIGHTS - FLEX ZONES (Continued)

The flexible zone galley weights listed in the following table are the maximum allowable weights that can be sustained by the floor and monocoque structure.

MAXIMUM ALLOWABLE GALLEY WEIGHTS					
FLEX ZONE	NUMBER OF CARTS	LOADS FROM	MAXIMUM WEIGHT		NUMBER OF GALLEYS ALLOWED
			LB	KG	
Door 1[a]	3 Full	Fwd	2070	938	1
	3 Half	Fwd	1200	544	1
Door 2 Centerline[b][c]	5 Full	Fwd/Aft	3000	1360	3
	6 Full	Fwd/Aft	3200	1451	3
	5 Half	Fwd/Aft	1700	771	3
	6 Half	Fwd/Aft	1800	816	3
Door 2 Side	2 Full	Fwd/Aft	1000	453	2[d]
	2 Full	Aisle	1150	521	[e]
	3 Full	Aisle	1400	635	[e]
	4 Full	Aisle	1800	816	2
	5 Full	Aisle	2200	997	2[d]
	6 Full	Aisle	2800	1270	2[d]
Door 4 Centerline[b][c]	5 Full	Fwd/Aft	3000	1360	3
	5 Half	Fwd/Aft	1700	771	3
Door 4 Side	2 Full	Fwd/Aft	1000	453	2[d]
	2 Full	Aisle	1150	521	[f]
	3 Full	Aisle	1400	635	[f]
	4 Full	Aisle	1800	816	2
	5 Full	Aisle	2200	997	2[d]
	6 Full	Aisle	2800	1270	2[d]

[a] A maximum of one galley is allowed in this flex zone.
[b] Any single or combination of 2 or 3 galleys.
[c] Centerline galleys cannot be arranged back to back.
[d] One galley per side of airplane.
[e] Any single or combination allowed by Door 2 Side Galley Cart Limit Table and the weight limits of that combination.
[f] Any single or combination allowed by Door 4 Side Galley Cart Limit Table and the weight limits of that combination.

APPLICABLE CONFIGURATIONS
C

BOEING PROPRIETARY
Export Controlled by ECCN 9E991

GALLEY WEIGHTS - FLEX ZONES (Continued)

NOTES
- Galleys installed on this airplane may be further limited by the carrier and contents weight as shown on the galley capacity placards.
- Purser stations weighing 1000 pounds or more are considered as galleys when installed in the galley flex zones. They must comply with galley weight limits and be counted in the number of galleys allowed.

The Door 2 side galley zone weights listed in the following table are the maximum allowable weights that can be sustained by the floor and monocoque structure.

MAXIMUM ALLOWABLE DOOR 2 SIDE GALLEY ZONE WEIGHTS		
ZONES	LB EACH	KG EACH
Forward Zones	2800	1270
Aft Zones	2627	1191
Combined Side Zones[a]	2800	1270

[a] Each side of airplane.

The Door 2 side galley cart limits listed in the following table are the maximum that can be sustained by the floor and monocoque structure.

DOOR 2 SIDE GALLEY CART LIMITS											
CENTERLINE GALLEYS				ALLOWED SIDE GALLEY SIZE - NUMBER OF FULL CARTS[a]					MAXIMUM NUMBER OF CARTS[a]		
MAXIMUM UNIT WEIGHT		MAXIMUM COMPLEX WEIGHT		MS-1	MS-2	MS-3	MS-4	TOTAL	FWD ZONES	AFT ZONES	SIDE ZONES
LB	KG	LB	KG	CARTS /ZONE	CARTS /ZONE	CARTS /ZONE	CARTS /ZONE	CARTS /APL	CARTS /APL	CARTS /APL	CARTS /APL
3200	1451	9600	4353	3	3	3	3	6	6	6	3
3000	1360	9000	4080	3	3	3	3	12	6	6	6
3000	1360	9000	4080	4	4	4	4	12	8	8	6
3000	1360	9000	4080	5	5	5	5	10	10	10	5
3000	1360	9000	4080	6	6	6	6	12	12	12	6
1800	816			[b]	[b]	[b]	[b]	[b]	[b]	[b]	[b]
1700	771			[b]	[b]	[b]	[b]	[b]	[b]	[b]	[b]

[a] Determine allowed side galley size using heaviest installed centerline galley.
[b] Number of side galley carts allowed is the same as 3000 LB (1360 KG) centerline galley.

NOTE Lower weight centerline galleys are allowed the configurations of the higher weight centerline galleys.

APPLICABLE CONFIGURATIONS
C

BOEING PROPRIETARY
Export Controlled by ECCN 9E991

GALLEY WEIGHTS - FLEX ZONES (Continued)

The Door 4 side galley zone weights listed in the following table are the maximum allowable weights that can be sustained by the floor and monocoque structure.

MAXIMUM ALLOWABLE DOOR 4 SIDE GALLEY ZONE WEIGHTS		
ZONES	LB EACH	KG EACH
Forward Zones	2800	1270
Aft Zones	1800	816
Combined Side Zones[a]	2800	1270

[a] Each side of airplane.

The Door 4 side galley cart limits listed in the following table are the maximum that can be sustained by the floor and monocoque structure.

DOOR 4 SIDE GALLEY CART LIMITS									
CENTERLINE GALLEY WEIGHTS		ALLOWED SIDE GALLEY SIZE - NUMBER OF CARTS[a]					MAXIMUM NUMBER OF CARTS[a]		
		MS-5	MS-6	MS-7	MS-8	TOTAL	FWD ZONES	AFT ZONES	SIDE ZONES
LB	KG	CARTS /ZONE	CARTS /ZONE	CARTS /ZONE	CARTS /ZONE	CARTS /APL	CARTS /APL	CARTS /APL	CARTS /APL
3000	1360	3	3	3	3	12	6	6	6
3000	1360	4	4	4	4	12	8	8	6
3000	1360	5	5	0	0	10	10	0	5
3000	1360	6	6	0	0	12	12	0	6
1700	771	[b]	[b]	[b]	[b]	[b]	[b]	[b]	[b]

[a] Determine allowed side galley size using heaviest installed centerline galley.
[b] Number of side galley carts allowed is the same as the 3000 LB (1360 KG) centerline galley.

NOTE Lower weight centerline galleys are allowed the configurations of the higher weight centerline galleys

APPLICABLE CONFIGURATIONS
C

BOEING PROPRIETARY
Export Controlled by ECCN 9E991

CARGO COMPARTMENT LOAD LIMITS

MAXIMUM ALLOWABLE WEIGHTS

This section provides main deck and lower deck cargo compartment loading. These values are the maximum allowable weights that can be sustained by the basic monocoque structure.

The following illustration shows the configuration of the cargo compartments.

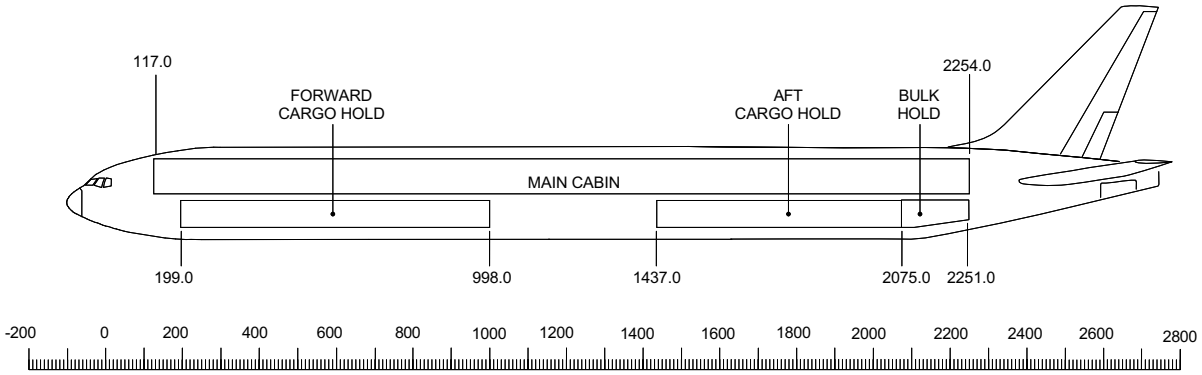

Three basic structural limitations that must be observed when loading payload are compartment, linear loading, and floor loading limitations. Maximum allowable compartment weights, and maximum allowable linear and floor loading are provided in the following table:

MAXIMUM ALLOWABLE LOAD						
COMPARTMENT	TOTAL WEIGHT		FLOOR LOADING			
	LB	KG	LB/IN.	KG/IN.	LB/SQ FT	KG/SQ FT
Main Cabin			81.0[a]	36.7[a]	85.0	38.5
Forward Cargo Hold[b]	90000	40823				
B.A. 199.0 to B.A. 885.1	80410	36473	117.2	53.1	200.0	90.7
B.A. 885.1 to B.A. 998.0	19644	8910	174.0[c]	78.9[c]	200.0	90.7
Aft Cargo Hold[b][d]	70000	31751				
B.A. 1437.0 to B.A. 1546.1	18983	8610	174.0[c]	78.9[c]	200.0	90.7
B.A. 1546.1 to B.A. 2075.0	61987	28116	117.2	53.1	200.0	90.7
Bulk Hold[d]	9000	4082				
B.A. 2075 to B.A. 2131	3752	1701	67.0	30.3	150.0	68.0
B.A. 2131 to B.A. 2251	6120	2776	Varies[e]	Varies[e]	150.0	68.0

[a] The main cabin allowable load includes the weight of passengers, passenger seats, and passenger carry-on baggage stowed under the seats.
[b] The lower hold limitations include the weight of cargo and the unit load devices (ULDs).
[c] Refer to CHP-SEC 1-68-xxx for tiedown requirements when loading cargo above 117.2 LB/IN. (53.1 KG/IN.).
[d] If the barrier net that separates the aft cargo hold from the bulk cargo hold is damaged or not installed, refer to CHP-SEC 1-66-85x for operational limitations.
[e] 67.0 LB/IN. (30.3 KG/IN.) at B.A. 2131, decreasing linearly to 35.0 LB/IN. (15.8 KG/IN.) at B.A. 2251.

APPLICABLE CONFIGURATIONS
All

BOEING PROPRIETARY
Export Controlled by ECCN 9E991

CARGO COMPARTMENT LOAD LIMITS (Continued)

MAXIMUM COMBINED LINEAR LOAD LIMITS

Total loading for the main deck and lower deck cargo must not exceed the combined linear loading limits shown in the following diagram:

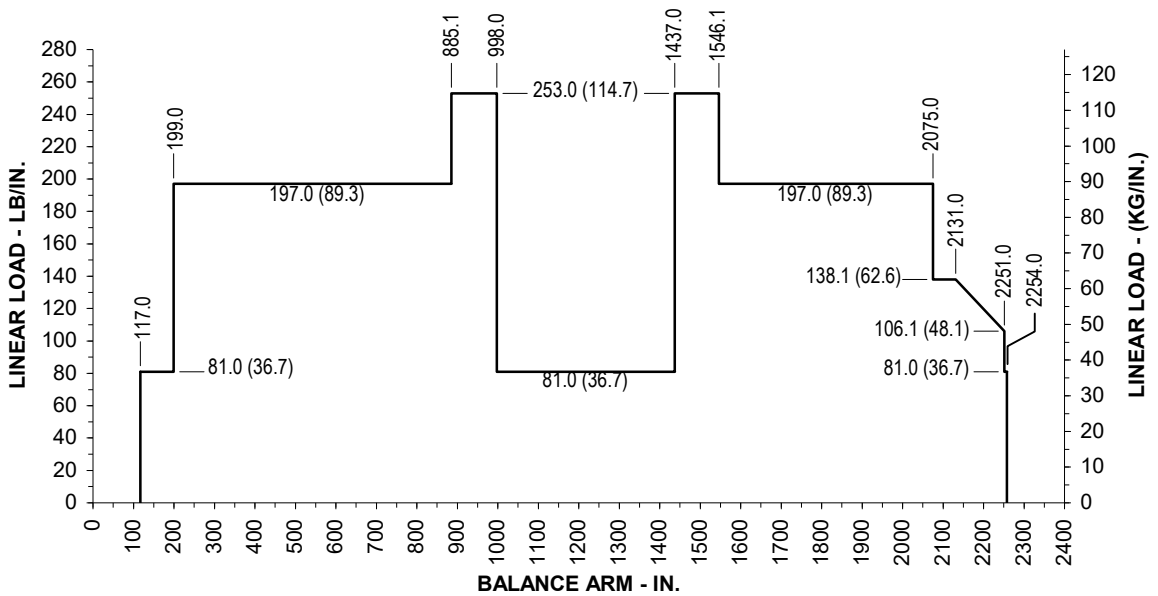

The main deck load is determined by adding the weight of a row of seats and passengers, with carry-on baggage, and dividing by the seat pitch.

Example:

With a nine abreast configuration consisting of two double seats at 100 LB (45 KG) each and a 250 LB (113 KG) quint seat with a passenger weight of 185 LB (84 KG) and a 33 inch seat pitch, the resulting load would be 64.1 LB/IN. (29.1 KG/IN.). The calculation using pounds is as follows:

$$\frac{100\text{ LB} + 100\text{ LB} + 250\text{ LB} + (9 \times 185\text{ LB})}{33\text{ IN.}} = 64.1\text{ LB/IN.}$$

Similarly, the calculation using kilograms is:

$$\frac{45\text{ KG} + 45\text{KG} + 113\text{KG} + (9 \times 84\text{KG})}{33\text{ IN.}} = 29.1\text{ KG/IN.}$$

APPLICABLE CONFIGURATIONS
All

BOEING PROPRIETARY
Export Controlled by ECCN 9E991

CERTIFIED UNIT LOAD DEVICE WEIGHTS BY POSITION

UNIT LOAD DEVICE POSITIONS - LOWER DECK

The following diagram illustrates the unit load device positions:

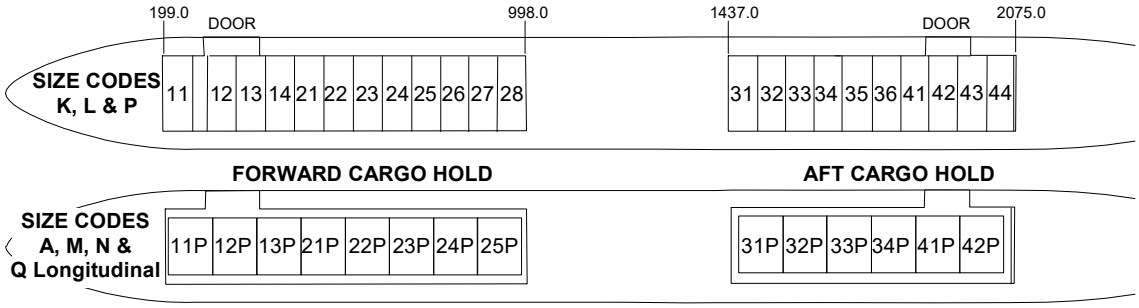

Size Codes K, L and P (Pounds)

Certified weights, in pounds, for unit load device size codes K, L and P in the forward hold are provided in the following table:

DESIGNATION		CERTIFIED WEIGHT FORWARD HOLD - LB										
		POSITION										
SIZE CODE	COMMON	11	12	13	14	21 & 22	23	24	25	26	27 & 28	28[a]
K	LD-1	3500	3500	3500	3500	3500	3500	3500	3500	3500	3500	5150
	LD-3	3500	3500	3500	3500	3500	3500	3500	3500	3500	3500	5150
	LD-3-45	3500	3500	3500	3500	3500	3500	3500	3500	3500	3500	5150
	LD-3-45W	3500	3500	3500	3500	3500	3500	3500	3500	3500	3500	5150
	LD-3 Pallet	3500	3500	3500	3500	3500	3500	3500	3500	3500	3500	3500
L	LD-5	7000	7000	7000	7000	7000	7000	7000	7000	7000	7000	10500
	LD-6	7000	7000	7000	7000	7000	7000	7000	7000	7000	7000	10500
	LD-10	7000	7000	7000	7000	7000	7000	7000	7000	7000	7000	10500
	LD-11	7000	7000	7000	7000	7000	7000	7000	7000	7000	7000	10500
	Half Pallet	7000	5920	6870	6830	7000	5620	5400	5400	7000	7000	7000
P	LD-2[b]				2700	2700	2700	2700	2700	2700	2700	

[a] Tiedowns are required. Refer to CHP-SEC 1-68-00x for tiedown requirements.
[b] This unit load device is not certified for all positions. Refer to CHP-SEC 1-64-0xx for allowable unit load device positions.

APPLICABLE CONFIGURATIONS
A, B, C, E, F

BOEING PROPRIETARY
Export Controlled by ECCN 9E991

CERTIFIED UNIT LOAD DEVICE WEIGHTS BY POSITION (Continued)

Certified weights, in pounds, for unit load device size codes K, L and P in the aft hold are provided in the following table:

DESIGNATION		CERTIFIED WEIGHT AFT HOLD - LB		
SIZE CODE	COMMON	POSITION		
		31[a]	31-36	41-44
K	LD-1	5150	3500	3500
	LD-3	5150	3500	3500
	LD-3-45	5150	3500	3500
	LD-3-45W	5150	3500	3500
	LD-3 Pallet	3500	3500	3500
L	LD-5	10500	7000	7000
	LD-6	10500	7000	7000
	LD-10	10500	7000	7000
	LD-11	10500	7000	7000
	Half Pallet	7000	7000	7000
P	LD-2[b]		2700	

[a] Tiedowns are required. Refer to CHP-SEC 1-68-00x for tiedown requirements.
[b] This unit load device is not certified for all positions. Refer to CHP-SEC 1-64-6xx for allowable unit load device positions.

Size Codes K, L and P (Kilograms)

Certified weights, in kilograms, for unit load device size codes K, L and P in the forward hold are provided in the following table:

DESIGNATION		CERTIFIED WEIGHT FORWARD HOLD - KG										
SIZE CODE	COMMON	POSITION										
		11	12	13	14	21 & 22	23	24	25	26	27 & 28	28[a]
K	LD-1	1587	1587	1587	1587	1587	1587	1587	1587	1587	1587	2336
	LD-3	1587	1587	1587	1587	1587	1587	1587	1587	1587	1587	2336
	LD-3-45	1587	1587	1587	1587	1587	1587	1587	1587	1587	1587	2336
	LD-3-45W	1587	1587	1587	1587	1587	1587	1587	1587	1587	1587	2336
	LD-3 Pallet	1587	1587	1587	1587	1587	1587	1587	1587	1587	1587	1587
L	LD-5	3175	3175	3175	3175	3175	3175	3175	3175	3175	3175	4762
	LD-6	3175	3175	3175	3175	3175	3175	3175	3175	3175	3175	4762
	LD-10	3175	3175	3175	3175	3175	3175	3175	3175	3175	3175	4762
	LD-11	3175	3175	3175	3175	3175	3175	3175	3175	3175	3175	4762
	Half Pallet	3175	2685	3116	3098	3175	2549	2449	2449	3175	3175	3175
P	LD-2[b]				1224	1224	1224	1224	1224	1224	1224	

[a] Tiedowns are required. Refer to CHP-SEC 1-68-00x for tiedown requirements.
[b] This unit load device is not certified for all positions. Refer to CHP-SEC 1-64-0xx for allowable unit load device positions.

APPLICABLE CONFIGURATIONS
A, B, C, E, F

BOEING PROPRIETARY
Export Controlled by ECCN 9E991

CERTIFIED UNIT LOAD DEVICE WEIGHTS BY POSITION (Continued)

Certified weights, in kilograms, for unit load device size codes K, L and P in the aft hold are provided in the following table:

DESIGNATION		CERTIFIED WEIGHT AFT HOLD - KG		
SIZE CODE	COMMON	POSITION		
		31[a]	31-36	41-44
K	LD-1	2336	1587	1587
	LD-3	2336	1587	1587
	LD-3-45	2336	1587	1587
	LD-3-45W	2336	1587	1587
	LD-3 Pallet	1587	1587	1587
L	LD-5	4762	3175	3175
	LD-6	4762	3175	3175
	LD-10	4762	3175	3175
	LD-11	4762	3175	3175
	Half Pallet	3175	3175	3175
P	LD-2[b]		1224	

[a] Tiedowns are required. Refer to CHP-SEC 1-68-00x for tiedown requirements.
[b] This unit load device is not certified for all positions. Refer to CHP-SEC 1-64-6xx for allowable unit load device positions.

Size Code Q Longitudinal

Certified weights for unit load device size code Q oriented longitudinal in the forward hold are provided in the following table:

DESIGNATION		CERTIFIED WEIGHT FORWARD HOLD					
SIZE CODE	COMMON	ALL POSITIONS		POSITION 25P		POSITION 25P[a]	
		LB	KG	LB	KG	LB	KG
Q	LD-4	5400	2449	5400	2449	8050	3651
	LD-8[b]	5400	2449				

[a] Tiedowns are required. Refer to CHP-SEC 1-68-00x for tiedown requirements.
[b] This unit load device is not certified for all positions. Refer to CHP-SEC 1-64-2xx for allowable unit load device positions.

Certified weights for unit load device size code Q oriented longitudinal in the aft hold are provided in the following table:

DESIGNATION		CERTIFIED WEIGHT AFT HOLD					
SIZE CODE	COMMON	ALL POSITIONS		POSITION 31P		POSITION 31P[a]	
		LB	KG	LB	KG	LB	KG
Q	LD-4	5400	2449	5400	2449	8050	3651
	LD-8[b]	5400	2449				

[a] Tiedowns are required. Refer to CHP-SEC 1-68-00x for tiedown requirements.
[b] This unit load device is not certified for all positions. Refer to CHP-SEC 1-64-8xx for allowable unit load device positions.

APPLICABLE CONFIGURATIONS
A, B, C, E, F

BOEING PROPRIETARY
Export Controlled by ECCN 9E991

CERTIFIED UNIT LOAD DEVICE WEIGHTS BY POSITION (Continued)

Size Codes A, M, and N

Certified weights for unit load device size codes A, M and N in the forward hold are provided in the following table:

DESIGNATION		CERTIFIED WEIGHT FORWARD HOLD[a]					
SIZE CODE	COMMON	POSITIONS 11P - 24P		POSITION 25P		POSITION 25P[b]	
		LB	KG	LB	KG	LB	KG
A	P1	10310	4676	11250	5102	15300	6939
	LD-7	10310	4676	11250	5102	15300	6939
	LD-9	10310	4676	11250	5102	15300	6939
M	P6/LD-36	11250	5102	14000	6350	16700	7574
N	Half Pallet	5400	2449	5400	2449	8200	3719

[a] Certain unit load devices may have additional loading restrictions (Refer to CHP-SEC 1-64-2xx).
[b] Tiedowns are required. Refer to CHP-SEC 1-68-00x for tiedown requirements.

Certified weights for unit load device size codes A, M and N in the aft hold are provided in the following table:

DESIGNATION		CERTIFIED WEIGHT AFT HOLD[a]					
SIZE CODE	COMMON	POSITIONS 32P - 42P		POSITION 31P		POSITION 31P[b]	
		LB	KG	LB	KG	LB	KG
A	P1	10310	4676	11250	5102	15300	6939
	LD-7	10310	4676	11250	5102	15300	6939
	LD-9	10310	4676	11250	5102	15300	6939
M	P6/LD-36	11250	5102	14000	6350	16700	7574
N	Half Pallet	5400	2449	5400	2449	8200	3719

[a] Certain unit load devices may have additional loading restrictions (Refer to CHP-SEC 1-64-8xx).
[b] Tiedowns are required. Refer to CHP-SEC 1-68-00x for tiedown requirements.

APPLICABLE CONFIGURATIONS
A, B, C, E, F

BOEING PROPRIETARY
Export Controlled by ECCN 9E991

CERTIFIED UNIT LOAD DEVICE WEIGHTS BY POSITION

UNIT LOAD DEVICE POSITIONS - LOWER DECK

The following diagram illustrates the unit load device positions:

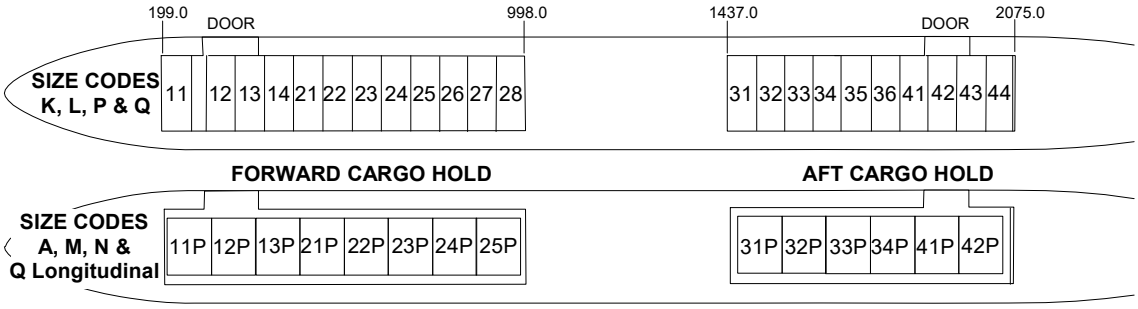

Size Codes K, L, P and Q (Pounds)

Certified weights, in pounds, for unit load device size codes K, L, P and Q in the forward hold are provided in the following table:

DESIGNATION		CERTIFIED WEIGHT FORWARD HOLD - LB										
		POSITION										
SIZE CODE	COMMON	11	12	13	14	21 & 22	23	24	25	26 & 27	28	28[a]
K	LD-1	3500	3500	3500	3500	3500	3500	3500	3500	3500	3500	5150
	LD-3	3500	3500	3500	3500	3500	3500	3500	3500	3500	3500	5150
	LD-3-45	3500	3500	3500	3500	3500	3500	3500	3500	3500	3500	5150
	LD-3-45W	3500	3500	3500	3500	3500	3500	3500	3500	3500	3500	5150
	LD-3 Pallet	3500	3500	3500	3500	3500	3500	3500	3500	3500	3500	3500
L	LD-5	7000	7000	7000	7000	7000	7000	7000	7000	7000	7000	10500
	LD-6	7000	7000	7000	7000	7000	7000	7000	7000	7000	7000	10500
	LD-10	7000	7000	7000	7000	7000	7000	7000	7000	7000	7000	10500
	LD-11	7000	7000	7000	7000	7000	7000	7000	7000	7000	7000	10500
	Half Pallet	7000	5920	6870	6830	7000	5620	5400	5400	7000	7000	7000
P	LD-2[b]				2700	2700	2700	2700	2700	2700		

[a] Tiedowns are required. Refer to CHP-SEC 1-68-00x for tiedown requirements.
[b] This unit load device is not certified for all positions. Refer to CHP-SEC 1-64-0xx for allowable unit load device positions.

APPLICABLE CONFIGURATIONS
D

BOEING PROPRIETARY
Export Controlled by ECCN 9E991

CERTIFIED UNIT LOAD DEVICE WEIGHTS BY POSITION (Continued)

Certified weights, in pounds, for unit load device size codes K, L, P and Q in the aft hold are provided in the following table:

DESIGNATION		CERTIFIED WEIGHT AFT HOLD - LB					
SIZE CODE	COMMON	POSITION					
		31[a]	31-36	41	42	43	44
K	LD-1	5150	3500	3500	3500	3500	3500
	LD-3	5150	3500	3500	3500	3500	3500
	LD-3-45	5150	3500	3500	3500	3500	3500
	LD-3-45W	5150	3500	3500	3500	3500	3500
	LD-3 Pallet	3500	3500	3500	3500	3500	3500
L	LD-5	10500	7000	7000	7000	7000	7000
	LD-6	10500	7000	7000	7000	7000	7000
	LD-10	10500	7000	7000	7000	7000	7000
	LD-11	10500	7000	7000	7000	7000	7000
	Half Pallet	7000	7000	6940	7000	6220	5890
P	LD-2[b]		2700				
Q	LD-4	8050	5400	5400	5400	5400	5400
	LD-8	8050	5400	5400	5400	5400	5400

[a] Tiedowns are required. Refer to CHP-SEC 1-68-00x for tiedown requirements.
[b] This unit load device is not certified for all positions. Refer to CHP-SEC 1-64-6xx for allowable unit load device positions.

Size Codes K, L, P and Q (Kilograms)

Certified weights, in kilograms, for unit load device size codes K, L, P and Q in the forward hold are provided in the following table:

DESIGNATION		CERTIFIED WEIGHT FORWARD HOLD - KG										
SIZE CODE	COMMON	POSITION										
		11	12	13	14	21 & 22	23	24	25	26 & 27	28	28[a]
K	LD-1	1587	1587	1587	1587	1587	1587	1587	1587	1587	1587	2336
	LD-3	1587	1587	1587	1587	1587	1587	1587	1587	1587	1587	2336
	LD-3-45	1587	1587	1587	1587	1587	1587	1587	1587	1587	1587	2336
	LD-3-45W	1587	1587	1587	1587	1587	1587	1587	1587	1587	1587	2336
	LD-3 Pallet	1587	1587	1587	1587	1587	1587	1587	1587	1587	1587	1587
L	LD-5	3175	3175	3175	3175	3175	3175	3175	3175	3175	3175	4762
	LD-6	3175	3175	3175	3175	3175	3175	3175	3175	3175	3175	4762
	LD-10	3175	3175	3175	3175	3175	3175	3175	3175	3175	3175	4762
	LD-11	3175	3175	3175	3175	3175	3175	3175	3175	3175	3175	4762
	Half Pallet	3175	2685	3116	3098	3175	2549	2449	2449	3175	3175	3175
P	LD-2[b]				1224	1224	1224	1224	1224	1224		

[a] Tiedowns are required. Refer to CHP-SEC 1-68-00x for tiedown requirements.
[b] This unit load device is not certified for all positions. Refer to CHP-SEC 1-64-0xx for allowable unit load device positions.

APPLICABLE CONFIGURATIONS
D

BOEING PROPRIETARY
Export Controlled by ECCN 9E991

CERTIFIED UNIT LOAD DEVICE WEIGHTS BY POSITION (Continued)

Certified weights, in kilograms, for unit load device size codes K, L, P and Q in the aft hold are provided in the following table:

DESIGNATION		CERTIFIED WEIGHT AFT HOLD - KG					
SIZE CODE	COMMON	POSITION					
		31[a]	31-36	41	42	43	44
K	LD-1	2336	1587	1587	1587	1587	1587
	LD-3	2336	1587	1587	1587	1587	1587
	LD-3-45	2336	1587	1587	1587	1587	1587
	LD-3-45W	2336	1587	1587	1587	1587	1587
	LD-3 Pallet	1587	1587	1587	1587	1587	1587
L	LD-5	4762	3175	3175	3175	3175	3175
	LD-6	4762	3175	3175	3175	3175	3175
	LD-10	4762	3175	3175	3175	3175	3175
	LD-11	4762	3175	3175	3175	3175	3175
	Half Pallet	3175	3175	3147	3175	2821	2671
P	LD-2[b]		1224				
Q	LD-4	3651	2449	2449	2449	2449	2449
	LD-8	3651	2449	2449	2449	2449	2449

[a] Tiedowns are required. Refer to CHP-SEC 1-68-00x for tiedown requirements.
[b] This unit load device is not certified for all positions. Refer to CHP-SEC 1-64-6xx for allowable unit load device positions.

Size Code Q Longitudinal

Certified weights for unit load device size code Q oriented longitudinal in the forward hold are provided in the following table:

DESIGNATION		CERTIFIED WEIGHT FORWARD HOLD					
SIZE CODE	COMMON	ALL POSITIONS		POSITION 25P		POSITION 25P[a]	
		LB	KG	LB	KG	LB	KG
Q	LD-4	5400	2449	5400	2449	8050	3651
	LD-8[b]	5400	2449				

[a] Tiedowns are required. Refer to CHP-SEC 1-68-00x for tiedown requirements.
[b] This unit load device is not certified for all positions. Refer to CHP-SEC 1-64-2xx for allowable unit load device positions.

Certified weights for unit load device size code Q oriented longitudinal in the aft hold are provided in the following table:

DESIGNATION		CERTIFIED WEIGHT AFT HOLD					
SIZE CODE	COMMON	ALL POSITIONS		POSITION 31P		POSITION 31P[a]	
		LB	KG	LB	KG	LB	KG
Q	LD-4	5400	2449	5400	2449	8050	3651
	LD-8[b]	5400	2449				

[a] Tiedowns are required. Refer to CHP-SEC 1-68-00x for tiedown requirements.
[b] This unit load device is not certified for all positions. Refer to CHP-SEC 1-64-8xx for allowable unit load device positions.

APPLICABLE CONFIGURATIONS
D

BOEING PROPRIETARY
Export Controlled by ECCN 9E991

CERTIFIED UNIT LOAD DEVICE WEIGHTS BY POSITION (Continued)

Size Codes A, M, and N

Certified weights for unit load device size codes A, M and N in the forward hold are provided in the following table:

DESIGNATION		CERTIFIED WEIGHT FORWARD HOLD[a]					
SIZE CODE	COMMON	POSITIONS 11P - 24P		POSITION 25P		POSITION 25P[b]	
		LB	KG	LB	KG	LB	KG
A	P1	10310	4676	11250	5102	15300	6939
	LD-7	10310	4676	11250	5102	15300	6939
	LD-9	10310	4676	11250	5102	15300	6939
M	P6/LD-36	11250	5102	14000	6350	16700	7574
N	Half Pallet	5400	2449	5400	2449	8200	3719

[a] Certain unit load devices may have additional loading restrictions (Refer to CHP-SEC 1-64-2xx).
[b] Tiedowns are required. Refer to CHP-SEC 1-68-00x for tiedown requirements.

Certified weights for unit load device size codes A, M and N in the aft hold are provided in the following table:

DESIGNATION		CERTIFIED WEIGHT AFT HOLD[a]					
SIZE CODE	COMMON	POSITIONS 32P - 42P		POSITION 31P		POSITION 31P[b]	
		LB	KG	LB	KG	LB	KG
A	P1	10310	4676	11250	5102	15300	6939
	LD-7	10310	4676	11250	5102	15300	6939
	LD-9	10310	4676	11250	5102	15300	6939
M	P6/LD-36	11250	5102	14000	6350	16700	7574
N	Half Pallet	5400	2449	5400	2449	8200	3719

[a] Certain unit load devices may have additional loading restrictions (Refer to CHP-SEC 1-64-8xx).
[b] Tiedowns are required. Refer to CHP-SEC 1-68-00x for tiedown requirements.

APPLICABLE CONFIGURATIONS
D

BOEING PROPRIETARY
Export Controlled by ECCN 9E991

CARGO COMPARTMENTS

GENERAL LOCATION AND ARRANGEMENT

The following airplane profile illustrates cargo compartment locations.

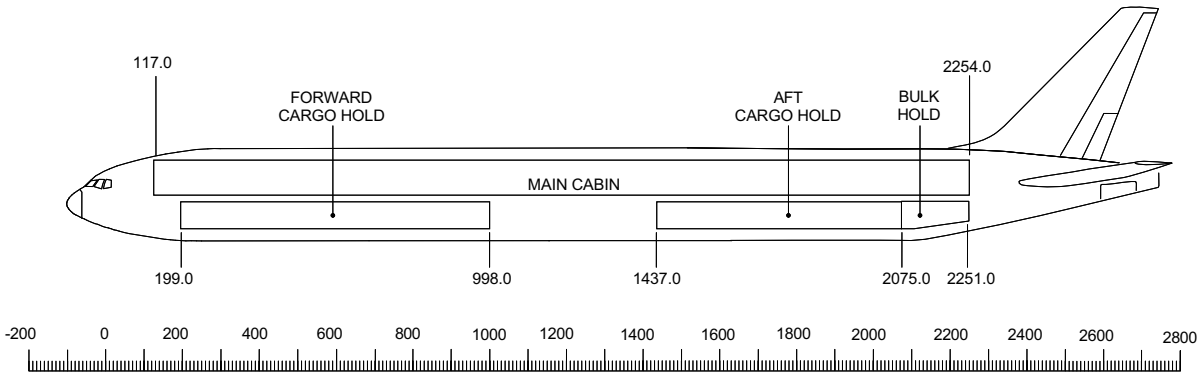

The following table provides cargo compartment locations, usable volumes and the corresponding volumetric centroid arms.

CARGO COMPARTMENT	LOCATION - B.A.		USABLE VOLUME - CU FT	B.A. IN.
	FROM	TO		
Forward Hold	199	998	4878	598.5
Aft	1437	2075	3878	1756.0
Bulk	2075	2251	600	2153.5
Total			9356	1178.0

APPLICABLE CONFIGURATIONS
All

BOEING PROPRIETARY
Export Controlled by ECCN 9E991

FORWARD CARGO COMPARTMENTS

FORWARD CARGO COMPARTMENT VOLUMES

The following figure shows forward cargo hold compartment boundaries.

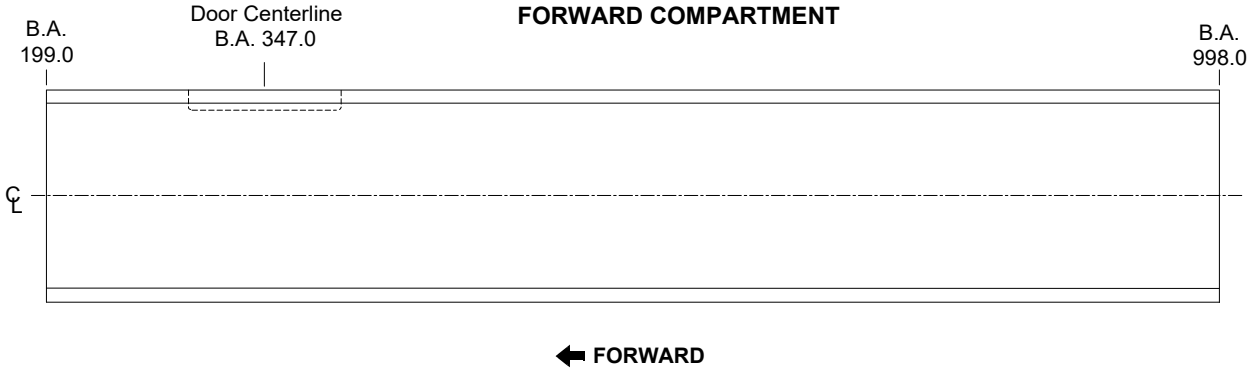

Total volume and the volumetric centroid for the above figure are provided in the following table.

COMPARTMENT	USABLE LOCATION		USABLE VOLUME CU FT	VOLUMETRIC CENTROID B.A. - IN.
	FROM	TO		
Forward Hold (Bulk)	199.0	998.0	4878	598.5

For volumes of individual unit load devices, refer to CHP-SEC 1-63-xxx; and for the allowable positions of unit load devices, refer to CHP-SEC 1-64-xxx.

FORWARD CARGO COMPARTMENT CROSS SECTIONS

The figure below illustrates the cross-section of the forward cargo compartment. This cross-section is constant throughout the length of the forward cargo compartment.

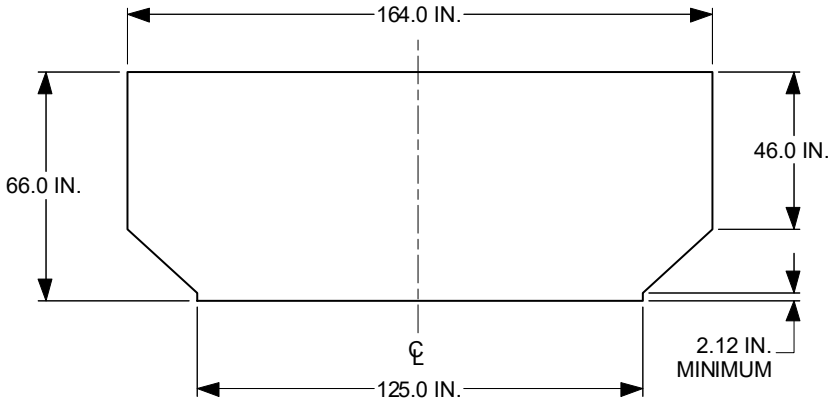

APPLICABLE CONFIGURATIONS
All

BOEING PROPRIETARY
Export Controlled by ECCN 9E991

FORWARD CARGO COMPARTMENTS (Continued)

CARGO DOOR DIMENSIONS AND ALLOWABLE PACKAGE SIZES

This section provides dimensions of the maximum package sizes which will pass through the forward cargo door opening. The maximum length is restricted by the geometry of the sidewall liner opposite the door.

Package sizes are approximate. Tilting, twisting, bending and/or rotating packages through door openings will allow additional lengths in many cases, but should be determined for each situation. A trial loading is recommended for packages with dimensions close to maximum dimensions indicated in the tables.

The height dimensions do not include allowances for items increasing package height such as fork lift tyne thicknesses, pallet depths, skid tub heights, etc. Any such devices must be accounted for in the total height.

Bulk cargo is usually carried in the bulk hold. Bulk cargo can also be carried in the Fwd Containerized Hold or as a mix with containerized loads provided:

1. The bulk cargo is not of shape or density that could become a hazard to the airplane structure or systems (e.g. dense or piercing items that could become projectiles) otherwise tie-down is required.
2. It is restrained to prevent causing a large change in the airplane C.G.
3. Has a 2 inch minimum clearance from the ceiling lights, smoke detectors and hold liners.
4. Does not exceed the holds area and longitudinal loading limits of CHP-SEC 1-60-00x.

Refer to CHP SEC 1-68-00x for tiedown information.

APPLICABLE CONFIGURATIONS
All

BOEING PROPRIETARY
Export Controlled by ECCN 9E991

FORWARD CARGO COMPARTMENTS (Continued)

Package Size Illustration

The following illustration shows package dimensioning used in the allowable package size tables.

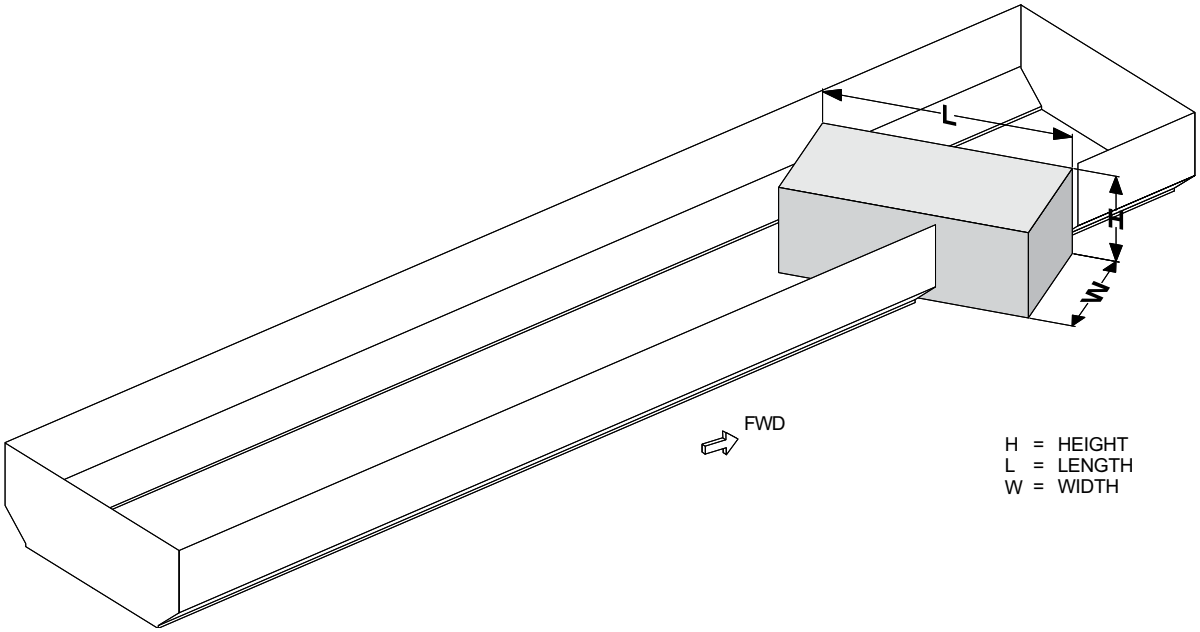

Door Dimensions

The following figure provides the forward cargo door dimensions.

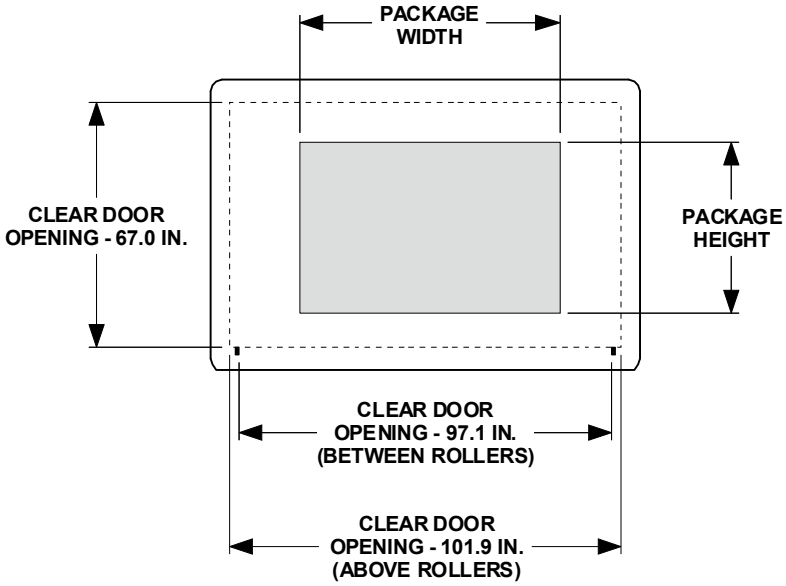

APPLICABLE CONFIGURATIONS
All

BOEING PROPRIETARY
Export Controlled by ECCN 9E991

FORWARD CARGO COMPARTMENTS (Continued)

Allowable Package Sizes

The following tables are applicable for packages loaded aft of the forward cargo door (B.A. 347.0 IN.).

FORWARD COMPARTMENT ALLOWABLE PACKAGE SIZES										
HEIGHT IN.	WIDTH IN.									
	10	20	30	40	50	60	70	80	90	101.9
	LENGTH IN.									
64	293	273	253	233	213	193	172	152	130	
60	312	291	271	251	231	211	190	170	149	133
55	328	308	288	268	247	227	206	185	164	146
50	343	323	302	282	262	241	220	199	177	157
45	347	327	306	286	265	245	224	203	181	160
40	347	327	306	286	265	245	224	203	181	160
35	347	327	306	286	265	245	224	203	181	160
30	347	327	306	286	265	245	224	203	181	160
25	347	327	306	286	265	245	224	203	181	160
20	347	327	306	286	265	245	224	203	181	160
15	347	327	306	286	265	245	224	203	181	160
10	347	327	306	286	265	245	224	203	181	160
5	347	327	306	286	265	245	224	203	181	160

APPLICABLE CONFIGURATIONS
All

BOEING PROPRIETARY
Export Controlled by ECCN 9E991

AFT CARGO COMPARTMENTS

AFT CARGO COMPARTMENT VOLUMES

The following figure shows aft cargo hold compartment boundaries.

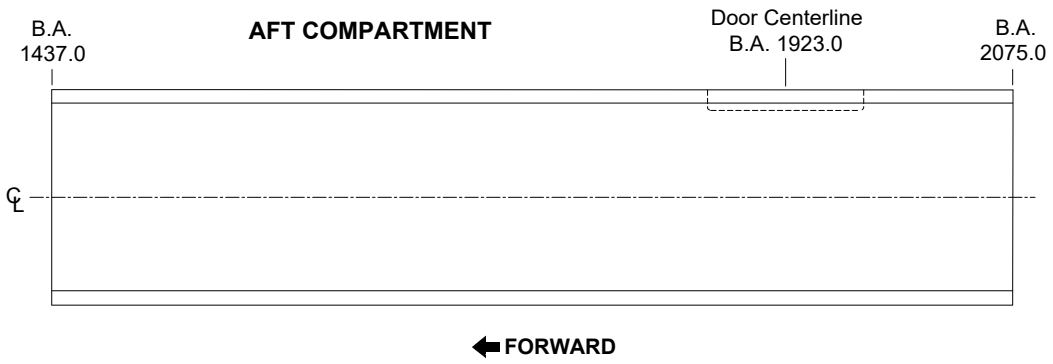

Total volume and the volumetric centroid for the above figure are provided in the following table.

COMPARTMENT	USABLE LOCATION		USABLE VOLUME CU FT	VOLUMETRIC CENTROID B.A. - IN.
	FROM	TO		
Aft Hold (Bulk)	1437.0	2075.0	3878	1756.0

For volumes of individual unit load devices, refer to CHP-SEC 1-63-xxx; and for the allowable positions of unit load devices, refer to CHP-SEC 1-64-xxx.

AFT CARGO COMPARTMENT CROSS SECTIONS

The figure below illustrates the cross-section of the aft cargo compartment. This cross-section is constant throughout the length of the aft cargo compartment.

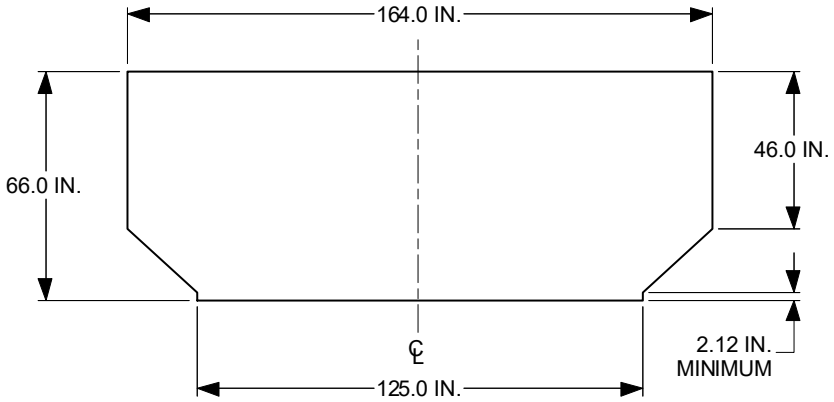

APPLICABLE CONFIGURATIONS
All

BOEING PROPRIETARY
Export Controlled by ECCN 9E991

AFT CARGO COMPARTMENTS (Continued)

CARGO DOOR DIMENSIONS AND ALLOWABLE PACKAGE SIZES

This section provides dimensions of the maximum package sizes which will pass through the aft cargo door opening. The maximum length is restricted by the geometry of the sidewall liner opposite the door.

Package sizes are approximate. Tilting, twisting, bending and/or rotating packages through door openings will allow additional lengths in many cases, but should be determined for each situation. A trial loading is recommended for packages with dimensions close to maximum dimensions indicated in the tables.

The height dimensions do not include allowances for items increasing package height such as fork lift tyne thicknesses, pallet depths, skid tub heights, etc. Any such devices must be accounted for in the total height.

Bulk cargo is usually carried in the bulk hold. Bulk cargo can also be carried in the Aft Containerized Hold or as a mix with containerized loads provided:

1. The bulk cargo is not of shape or density that could become a hazard to the airplane structure or systems (e.g. dense or piercing items that could become projectiles) otherwise tie-down is required.
2. It is restrained to prevent causing a large change in the airplane C.G.
3. Has a 2 inch minimum clearance from the ceiling lights, smoke detectors and hold liners.
4. Does not exceed the holds area and longitudinal loading limits of CHP-SEC 1-60-00x.
5. If bulk cargo is loaded directly on the floor panels, it is limited to 100 LB/SQ-FT (45.4 KG/SQ-FT). For full compartment capability, a pallet must be used as a temporary floor.
6. The barrier net at the end of the cargo hold must be installed when carrying non-certified ULDs or bulk cargo. If the bulk cargo barrier net is missing or damaged, refer to CHP-SEC 1-66-85x.
7. The bulk cargo can shift in flight and may be a hazard when opening the cargo door.

Refer to CHP SEC 1-68-00x for tiedown information.

APPLICABLE CONFIGURATIONS
All

BOEING PROPRIETARY
Export Controlled by ECCN 9E991

AFT CARGO COMPARTMENTS (Continued)

Package Size Illustration

The following illustration shows package dimensioning used in the allowable package size tables.

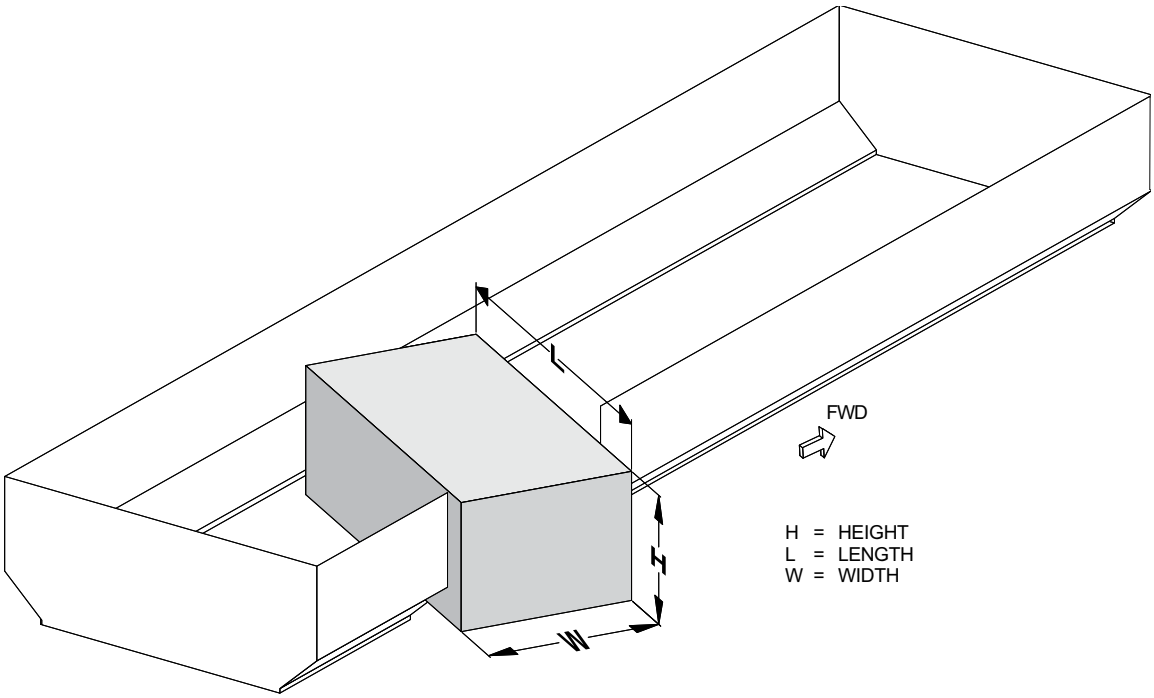

Door Dimensions

The following figure provides the aft cargo door dimensions.

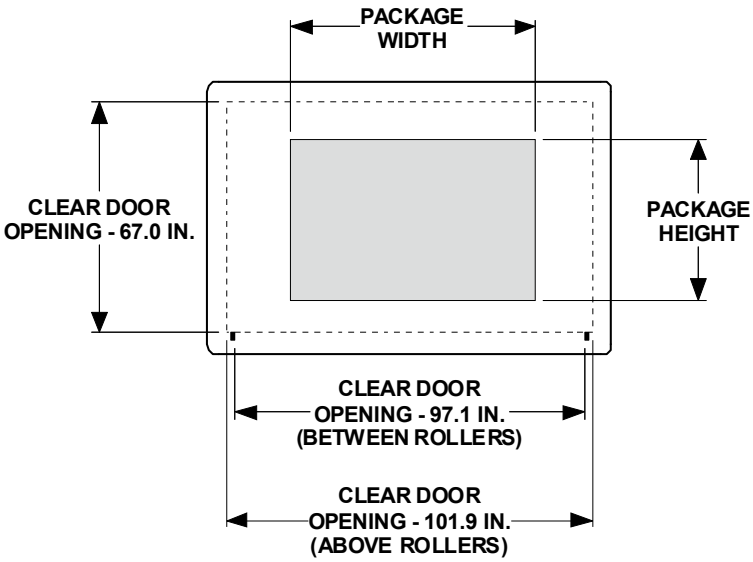

APPLICABLE CONFIGURATIONS
All

BOEING PROPRIETARY
Export Controlled by ECCN 9E991

AFT CARGO COMPARTMENTS (Continued)

Allowable Package Sizes

The following tables are applicable for packages loaded forward of the aft cargo door (B.A. 1923.0 IN.).

AFT COMPARTMENT ALLOWABLE PACKAGE SIZES										
HEIGHT IN.	WIDTH IN.									
	10	20	30	40	50	60	70	80	90	101.9
	LENGTH IN.									
64	293	273	253	233	213	193	172	152	130	
60	312	291	271	251	231	211	190	170	149	133
55	328	308	288	268	247	227	206	185	164	146
50	343	323	302	282	262	241	220	199	177	157
45	347	327	306	286	265	245	224	203	181	160
40	347	327	306	286	265	245	224	203	181	160
35	347	327	306	286	265	245	224	203	181	160
30	347	327	306	286	265	245	224	203	181	160
25	347	327	306	286	265	245	224	203	181	160
20	347	327	306	286	265	245	224	203	181	160
15	347	327	306	286	265	245	224	203	181	160
10	347	327	306	286	265	245	224	203	181	160
5	347	327	306	286	265	245	224	203	181	160

APPLICABLE CONFIGURATIONS
All

BOEING PROPRIETARY
Export Controlled by ECCN 9E991

BULK CARGO COMPARTMENT

BULK CARGO COMPARTMENT VOLUME

The following figure shows the bulk cargo hold compartment boundaries.

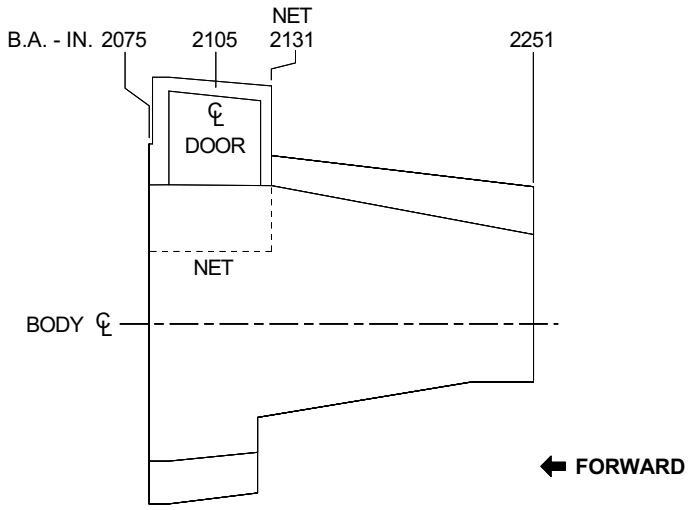

Total volume and the volumetric centroid for the above figure are provided in the following table.

COMPARTMENT	USABLE LOCATION		USABLE VOLUME CU FT	VOLUMETRIC CENTROID B.A. - IN.
	FROM	TO		
Bulk Compartment	2075.0	2251.0	600	2153.5

BULK CARGO COMPARTMENT CROSS SECTIONS

The figure below illustrates the general layout of the bulk cargo compartment. The numbered labels and shaded panels correspond to the cross-sections provided following the illustration.

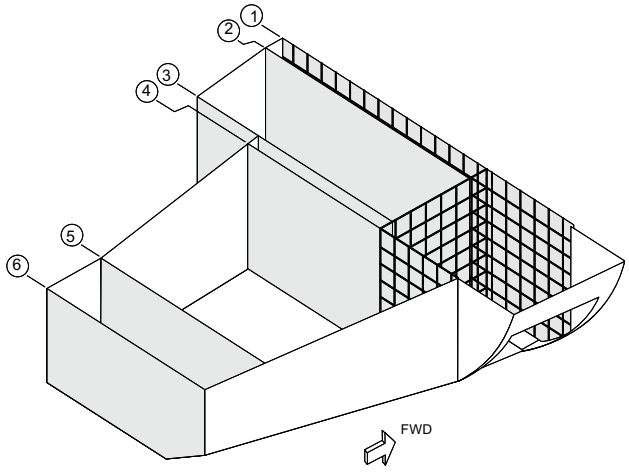

APPLICABLE CONFIGURATIONS
C

BOEING PROPRIETARY
Export Controlled by ECCN 9E991

BULK CARGO COMPARTMENT (Continued)

The following cross-sections for the bulk compartment can be used to determine ceiling clearances at various bulk cargo compartment balance arms. The relative location of the cross-sectional cut can be determined by correlating the cross-section number to the general layout shown above.

VIEW LOOKING FORWARD

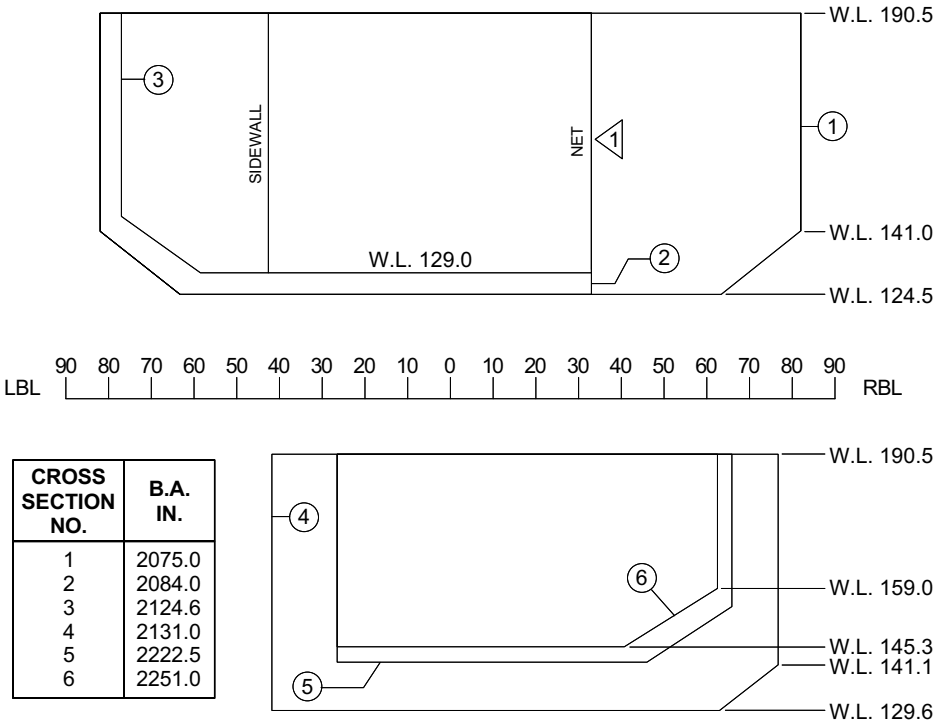

CROSS SECTION NO.	B.A. IN.
1	2075.0
2	2084.0
3	2124.6
4	2131.0
5	2222.5
6	2251.0

1 NET SHOWN IS FROM B.A. 2075.0 TO B.A. 2131.0

APPLICABLE CONFIGURATIONS
C

BOEING PROPRIETARY
Export Controlled by ECCN 9E991

BULK CARGO COMPARTMENT (Continued)

CARGO DOOR DIMENSIONS AND ALLOWABLE PACKAGE SIZES

This section provides dimensions of the maximum package sizes which will pass through the aft cargo door opening. The maximum length is restricted by the geometry of the compartment.

Package sizes are approximate. Tilting, twisting, bending and/or rotating packages through door openings will allow additional lengths in many cases, but should be determined for each situation. A trial loading is recommended for packages with dimensions close to maximum dimensions indicated in the tables.

Package Size Illustration

The following illustration shows package dimensioning used in the allowable package size tables.

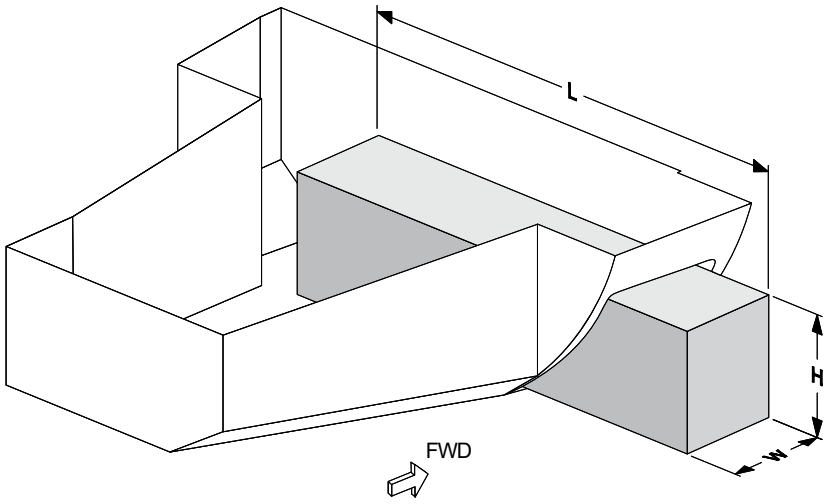

APPLICABLE CONFIGURATIONS
C

BOEING PROPRIETARY
Export Controlled by ECCN 9E991

BULK CARGO COMPARTMENT (Continued)

Door Dimensions

The following figure provides the aft cargo door dimensions.

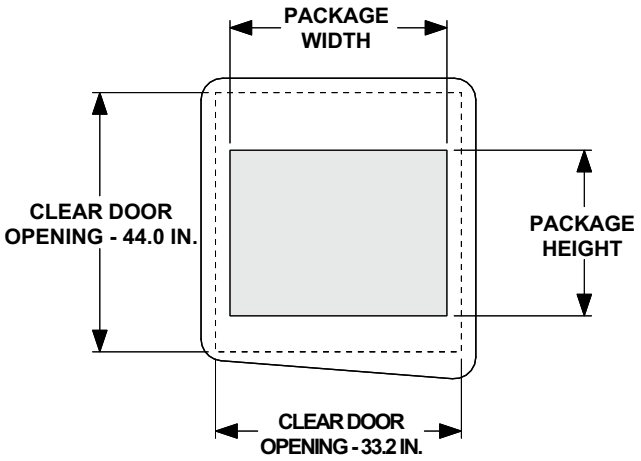

Allowable Package Sizes

The following tables are applicable for packages loaded forward of the bulk cargo door (B.A. 2105.0 IN.).

BULK COMPARTMENT ALLOWABLE PACKAGE SIZES						
HEIGHT IN.	WIDTH IN.					
	5	10	15	20	25	33.2
	LENGTH IN.					
40	169	169	154	142	133	123
36	169	169	161	147	137	128
32	169	169	169	154	143	133
28	169	169	169	162	150	137
24	169	169	169	162	150	137
20	169	169	169	162	150	137
16	169	169	169	162	150	137
12	169	169	169	162	150	137
8	169	169	169	162	150	137
4	169	169	169	162	150	137

APPLICABLE CONFIGURATIONS
C

BOEING PROPRIETARY
Export Controlled by ECCN 9E991

BULK CARGO COMPARTMENT

BULK CARGO COMPARTMENT VOLUME

The following figure shows the bulk cargo hold compartment boundaries.

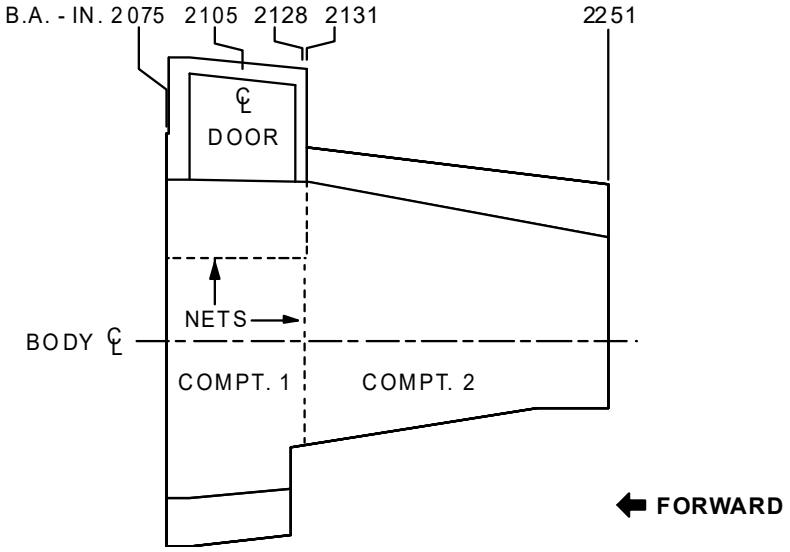

Total volume and the volumetric centroid for the above figure are provided in the following table.

VOLUMES	COMPARTMENTS	
	1	2
Bulk Compartment Volumes CU. FT.	220	380
Total Bulk Hold CU. FT.	600	
Volumetric Centroids B.A. - IN.	2100.5	2184.2
	2153.5	

APPLICABLE CONFIGURATIONS
A, B, D, E, F

BOEING PROPRIETARY
Export Controlled by ECCN 9E991

BULK CARGO COMPARTMENT (Continued)

BULK CARGO COMPARTMENT CROSS SECTIONS

The figure below illustrates the general layout of the bulk cargo compartment. The numbered labels and shaded panels correspond to the cross-sections provided following the illustration.

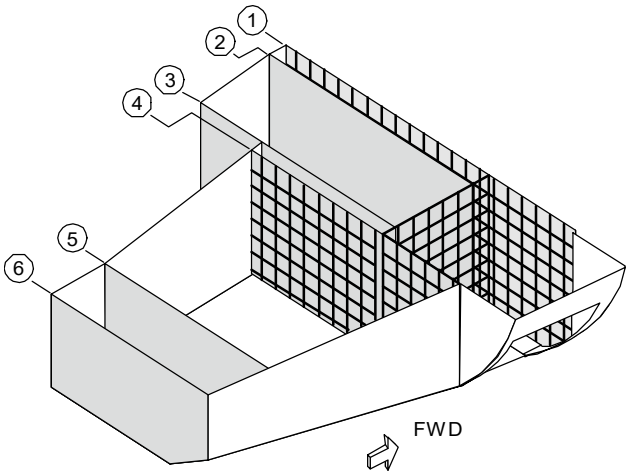

APPLICABLE CONFIGURATIONS
A, B, D, E, F

BOEING PROPRIETARY
Export Controlled by ECCN 9E991

BULK CARGO COMPARTMENT (Continued)

The following cross-sections for the bulk compartment can be used to determine ceiling clearances at various bulk cargo compartment balance arms. The relative location of the cross-sectional cut can be determined by correlating the cross-section number to the general layout shown above.

VIEW LOOKING FORWARD

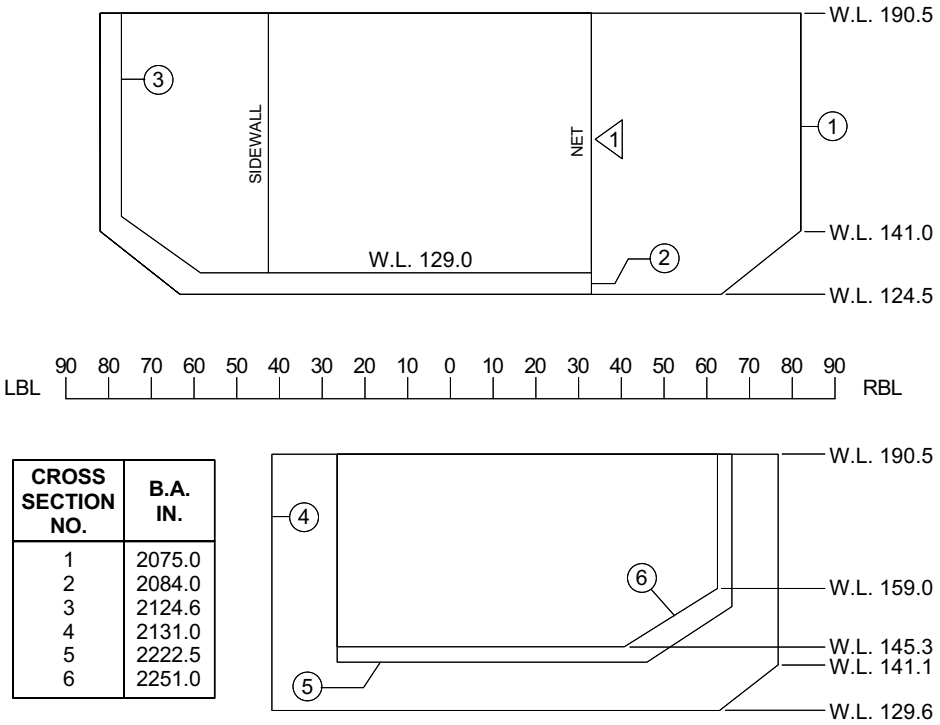

CROSS SECTION NO.	B.A. IN.
1	2075.0
2	2084.0
3	2124.6
4	2131.0
5	2222.5
6	2251.0

1 NET SHOWN IS FROM B.A. 2075.0 TO B.A. 2131.0

APPLICABLE CONFIGURATIONS
A, B, D, E, F

BOEING PROPRIETARY
Export Controlled by ECCN 9E991

BULK CARGO COMPARTMENT (Continued)

CARGO DOOR DIMENSIONS AND ALLOWABLE PACKAGE SIZES

This section provides dimensions of the maximum package sizes which will pass through the aft cargo door opening. The maximum length is restricted by the geometry of the compartment.

Package sizes are approximate. Tilting, twisting, bending and/or rotating packages through door openings will allow additional lengths in many cases, but should be determined for each situation. A trial loading is recommended for packages with dimensions close to maximum dimensions indicated in the tables.

Package Size Illustration

The following illustration shows package dimensioning used in the allowable package size tables.

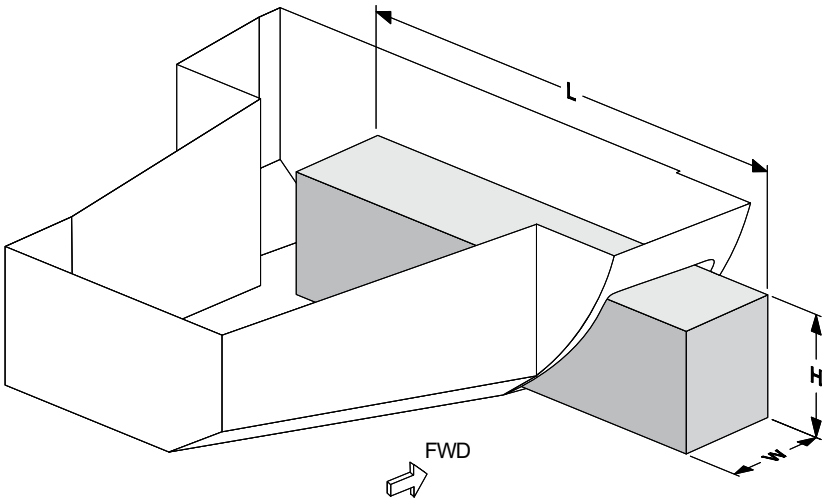

APPLICABLE CONFIGURATIONS
A, B, D, E, F

BOEING PROPRIETARY
Export Controlled by ECCN 9E991

BULK CARGO COMPARTMENT (Continued)

Door Dimensions

The following figure provides the aft cargo door dimensions.

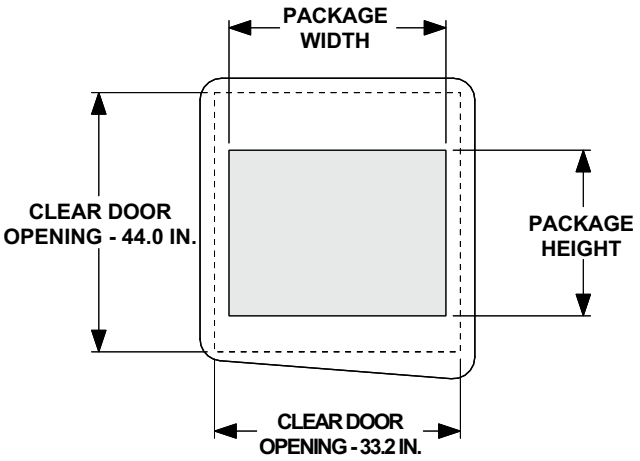

Allowable Package Sizes

The following tables are applicable for packages loaded forward of the bulk cargo door (B.A. 2105.0 IN.).

BULK COMPARTMENT ALLOWABLE PACKAGE SIZES						
HEIGHT IN.	WIDTH IN.					
	5	10	15	20	25	33.2
	LENGTH IN.					
40	169	169	154	142	133	123
36	169	169	161	147	137	128
32	169	169	169	154	143	133
28	169	169	169	162	150	137
24	169	169	169	162	150	137
20	169	169	169	162	150	137
16	169	169	169	162	150	137
12	169	169	169	162	150	137
8	169	169	169	162	150	137
4	169	169	169	162	150	137

APPLICABLE CONFIGURATIONS
A, B, D, E, F

BOEING PROPRIETARY
Export Controlled by ECCN 9E991

UNIT LOAD DEVICES - LOWER DECK

SIZE CODES K, L AND P

A Unit Load Device (ULD) is a device for grouping and retaining cargo for transit. The ULD can refer to a pallet and net, a pallet and net over an igloo, or a container. This Chapter-Section-Subject provides volume, center of gravity limits, dimensions, and lateral positions for size code K, L and P ULDs.

Size code K, L and P certified ULDs conform to TSO-C90 which is a Technical Standard Order (TSO) from the FAA.

Non-certified Size Code K, L and P ULDs can be carried provided all of the following considerations are observed. Otherwise, they must be tied down per CHP-SEC 1-68-00x:

1. The non-certified ULD must be serviceable, well constructed, and loaded in a manner that will prevent it or its cargo from becoming a hazard to the airplane structure or systems under operational loads.
2. The non-certified ULD must match the external profiles of the allowable certified ULDs shown in this section.
3. The non-certified ULD must be 63 inches or taller in height (including non-certified LD-3-45 and LD-3-45W).

Use of ULDs that are not specified in this manual requires tiedowns for the ULD's gross weight. See CHP-SEC 1-68-00x.

APPLICABLE CONFIGURATIONS
A, B, C, E, F

BOEING PROPRIETARY
Export Controlled by ECCN 9E991

UNIT LOAD DEVICES - LOWER DECK (Continued)

VOLUMES AND CENTER OF GRAVITY LIMITS

The design capacities of the support fittings and structure have been established within an allowable center of gravity range as shown in the table below.

DESIGNATION		BASE DIMENSION IN.	VOLUME CU FT	ALLOWABLE CENTER OF GRAVITY RANGE IN.		
SIZE CODE	COMMON			VERTICAL	LATERAL	LONGITUDINAL
K	LD-1	60.4 x 61.5	175	34.0	± 6.2	± 6.0
	LD-3		159	34.0	± 6.2	± 6.0
	LD-3-45		110	34.0	± 6.2	± 6.0
	LD-3-45W		130	34.0	± 6.2	± 6.0
	LD-3 Pallet		119	34.0	± 6.2	± 6.0
L	LD-5	60.4 x 125	261	34.0	± 12.5	± 6.0
	LD-6		322	34.0	± 12.5	± 6.0
	LD-10		246	34.0	± 12.5	± 6.0
	LD-11		262	34.0	± 12.5	± 6.0
	Half Pallet		256	34.0	± 12.5	± 6.0
P	LD-2	60.4 x 47.0	120	34.0	± 4.7	± 6.0

The allowable center of gravity range is based on the geometric center of the unit load device base dimension. The vertical center of gravity is measured from the base of the container. Good judgement must be used in distributing the load within the unit load device.

CAUTIONS

- UNIT LOAD DEVICES WHICH DO NOT SATISFY THE PRECEDING REQUIREMENTS MUST BE RESTRAINED BY TIEDOWNS AS SPECIFIED IN CHP-SEC 1-68-0xx, CARGO TIEDOWNS.
- CARGO CARRIED IN A ULD THAT IS OF SHAPE AND/OR DENSITY THAT COULD BECOME A HAZARD TO THE AIRPLANE STRUCTURE OR SYSTEMS UNDER OPERATIONAL LOADS (E.G. DENSE OR PIERCING ITEMS THAT COULD BECOME PROJECTILES) MUST BE TIED DOWN TO THE ULD.
- UNIT LOAD DEVICES LESS THAN 63 INCHES IN HEIGHT THAT ARE NOT VERTICALLY RESTRAINED MUST BE RESTRAINED BY TIEDOWNS AS SPECIFIED IN CHP-SEC 1-68-0xx.
- TO REDUCE INADVERTENT CARGO MOVEMENT, IT IS RECOMMENDED THAT ALL AVAILABLE RESTRAINTS, INCLUDING LATERAL GUIDES, IN UNOCCUPIED POSITIONS BE RAISED.
- NON-CERTIFIED ULDS MUST ENGAGE THE RESTRAINT HARDWARE SIMILAR TO A CERTIFIED ULD. LOAD LIMITATIONS ASSOCIATED WITH MISSING/INOPERATIVE RESTRAINTS MUST BE OBSERVED IN THE SAME MANNER AS FOR CERTIFIED ULDS TO PREVENT DAMAGE TO THE RESTRAINT EQUIPMENT OR ITS LOCAL SUPPORT STRUCTURE.

APPLICABLE CONFIGURATIONS
A, B, C, E, F

BOEING PROPRIETARY
Export Controlled by ECCN 9E991

UNIT LOAD DEVICES - LOWER DECK (Continued)

DIMENSIONS AND LATERAL POSITIONS

The external dimensions and lateral positions of size code K, L & P unit load devices in the lower hold are provided in the following illustrations (refer to CHP-SEC 1-69-xxx for actual lateral locations).

Size Code K

ULD DIMENSIONS	LATERAL POSITION
LD-1 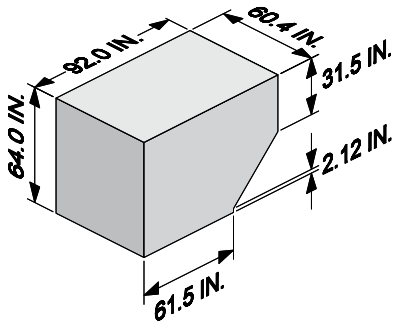	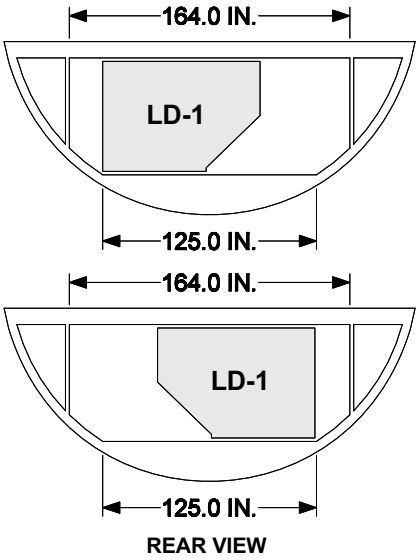
LD-3 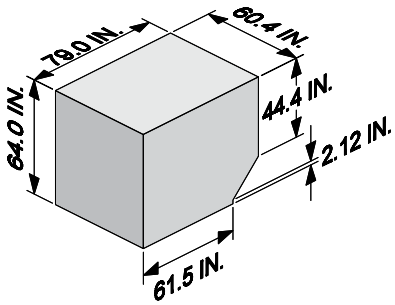	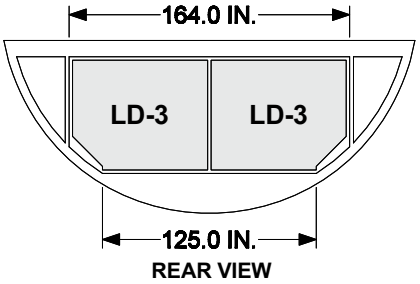
LD-3 Pallet 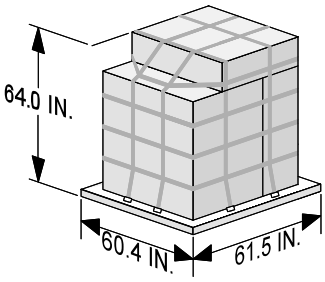	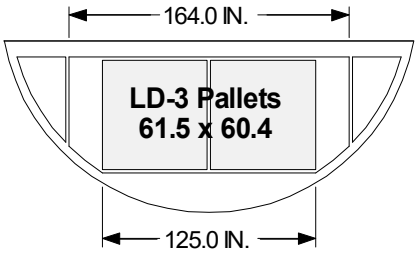

APPLICABLE CONFIGURATIONS
A, B, C, E, F

BOEING PROPRIETARY
Export Controlled by ECCN 9E991

UNIT LOAD DEVICES - LOWER DECK (Continued)

Size Code K (Continued)

ULD DIMENSIONS	LATERAL POSITION
LD-3-45 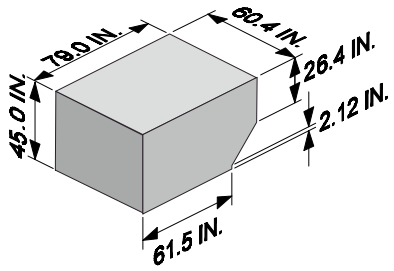 	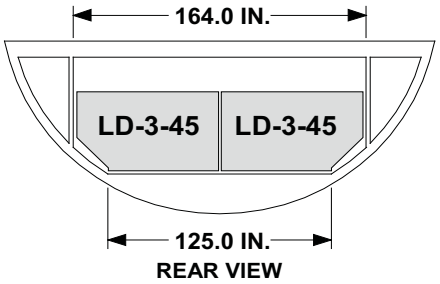
LD-3-45W 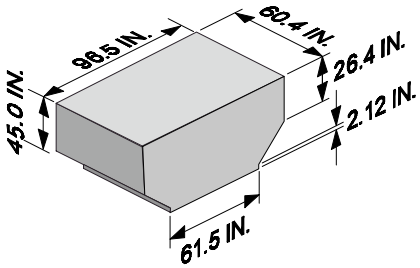 	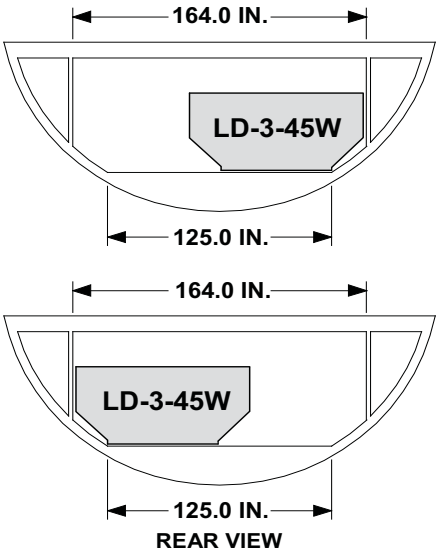

APPLICABLE CONFIGURATIONS
A, B, C, E, F

BOEING PROPRIETARY
Export Controlled by ECCN 9E991

UNIT LOAD DEVICES - LOWER DECK (Continued)

Size Code L

ULD DIMENSIONS	LATERAL POSITION
LD-5 LD-11 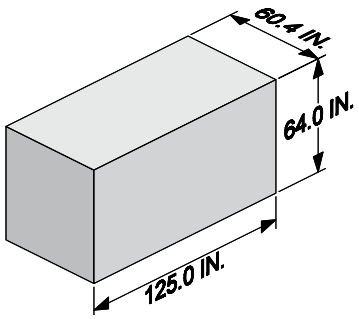	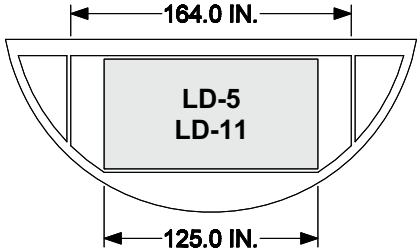 REAR VIEW
LD-6 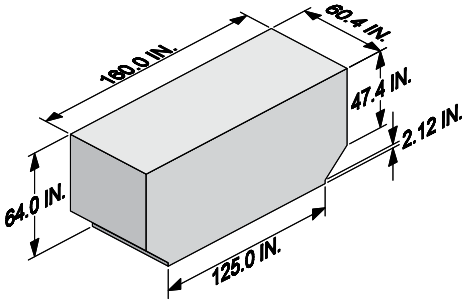	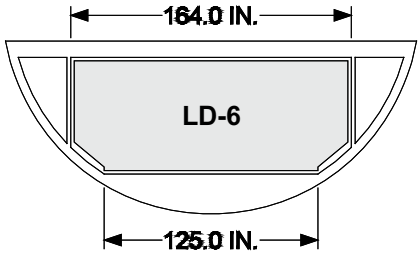 REAR VIEW
LD-10 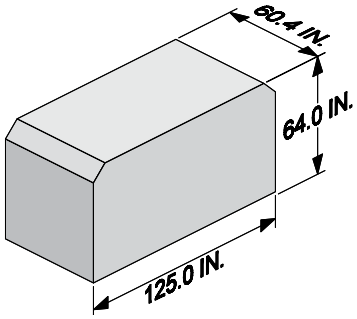	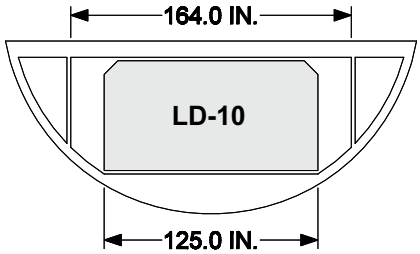 REAR VIEW
Half Pallet 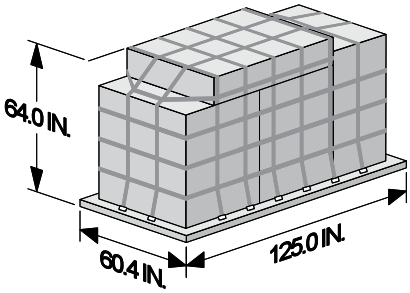	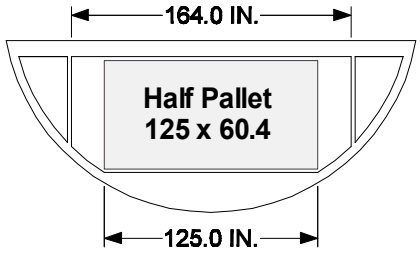 REAR VIEW

APPLICABLE CONFIGURATIONS
A, B, C, E, F

BOEING PROPRIETARY
Export Controlled by ECCN 9E991

UNIT LOAD DEVICES - LOWER DECK (Continued)

Size Code P

ULD DIMENSIONS	LATERAL POSITION
LD-2 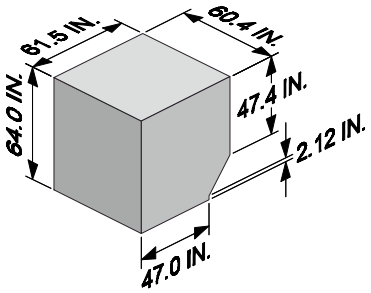	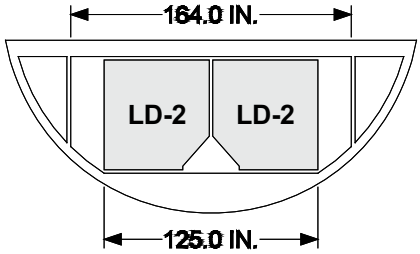 REAR VIEW

APPLICABLE CONFIGURATIONS
A, B, C, E, F

BOEING PROPRIETARY
Export Controlled by ECCN 9E991

UNIT LOAD DEVICES - LOWER DECK

SIZE CODES K, L, P AND Q

A Unit Load Device (ULD) is a device for grouping and retaining cargo for transit. The ULD can refer to a pallet and net, a pallet and net over an igloo, or a container. This Chapter-Section-Subject provides volume, center of gravity limits, dimensions, and lateral positions for size code K, L, P and Q ULDs.

Size code K, L, P and Q certified ULDs conform to TSO-C90 which is a Technical Standard Order (TSO) from the FAA.

Non-certified size code K, L, P and Q ULDs can be carried provided all of the following considerations are observed. Otherwise, they must be tied down per CHP-SEC 1-68-00x:

1. The non-certified ULD must be serviceable, well constructed, and loaded in a manner that will prevent it or its cargo from becoming a hazard to the airplane structure or systems under operational loads.
2. The non-certified ULD must match the external profiles of the allowable certified ULDs shown in this section.
3. The non-certified ULD must be 63 inches or taller in height (including non-certified LD-3-45 and LD-3-45W).

Use of ULDs that are not specified in this manual requires tiedowns for the ULD's gross weight. See CHP-SEC 1-68-00x.

APPLICABLE CONFIGURATIONS
D

BOEING PROPRIETARY
Export Controlled by ECCN 9E991

UNIT LOAD DEVICES - LOWER DECK (Continued)

VOLUMES AND CENTER OF GRAVITY LIMITS

The design capacities of the support fittings and structure have been established within an allowable center of gravity range as shown in the table below.

DESIGNATION		BASE DIMENSION IN.	VOLUME CU FT	ALLOWABLE CENTER OF GRAVITY RANGE IN.		
SIZE CODE	COMMON			VERTICAL	LATERAL	LONGITUDINAL
K	LD-1	60.4 x 61.5	175	34.0	± 6.2	± 6.0
	LD-3		159	34.0	± 6.2	± 6.0
	LD-3-45		110	34.0	± 6.2	± 6.0
	LD-3-45W		130	34.0	± 6.2	± 6.0
	LD-3 Pallet		119	34.0	± 6.2	± 6.0
L	LD-5	60.4 x 125	261	34.0	± 12.5	± 6.0
	LD-6		322	34.0	± 12.5	± 6.0
	LD-10		246	34.0	± 12.5	± 6.0
	LD-11		262	34.0	± 12.5	± 6.0
	Half Pallet		256	34.0	± 12.5	± 6.0
P	LD-2	60.4 x 47.0	120	34.0	± 4.7	± 6.0
Q	LD-4	60.4 x 96	200	34.0	± 9.6	± 6.0
	LD-8		252	34.0	± 9.6	± 6.0

The allowable center of gravity range is based on the geometric center of the unit load device base dimension. The vertical center of gravity is measured from the base of the container. Good judgement must be used in distributing the load within the unit load device.

CAUTIONS

- UNIT LOAD DEVICES WHICH DO NOT SATISFY THE PRECEDING REQUIREMENTS MUST BE RESTRAINED BY TIEDOWNS AS SPECIFIED IN CHP-SEC 1-68-0xx, CARGO TIEDOWNS.
- CARGO CARRIED IN A ULD THAT IS OF SHAPE AND/OR DENSITY THAT COULD BECOME A HAZARD TO THE AIRPLANE STRUCTURE OR SYSTEMS UNDER OPERATIONAL LOADS (E.G. DENSE OR PIERCING ITEMS THAT COULD BECOME PROJECTILES) MUST BE TIED DOWN TO THE ULD.
- UNIT LOAD DEVICES LESS THAN 63 INCHES IN HEIGHT THAT ARE NOT VERTICALLY RESTRAINED MUST BE RESTRAINED BY TIEDOWNS AS SPECIFIED IN CHP-SEC 1-68-0xx.
- TO REDUCE INADVERTENT CARGO MOVEMENT, IT IS RECOMMENDED THAT ALL AVAILABLE RESTRAINTS, INCLUDING LATERAL GUIDES, IN UNOCCUPIED POSITIONS BE RAISED.
- NON-CERTIFIED ULDS MUST ENGAGE THE RESTRAINT HARDWARE SIMILAR TO A CERTIFIED ULD. LOAD LIMITATIONS ASSOCIATED WITH MISSING/INOPERATIVE RESTRAINTS MUST BE OBSERVED IN THE SAME MANNER AS FOR CERTIFIED ULDS TO PREVENT DAMAGE TO THE RESTRAINT EQUIPMENT OR ITS LOCAL SUPPORT STRUCTURE.

APPLICABLE CONFIGURATIONS
D

BOEING PROPRIETARY
Export Controlled by ECCN 9E991

UNIT LOAD DEVICES - LOWER DECK (Continued)

DIMENSIONS AND LATERAL POSITIONS

The external dimensions and lateral positions of size code K, L, P & Q unit load devices in the lower hold are provided in the following illustrations (refer to CHP-SEC 1-69-xxx for actual lateral locations).

Size Code K

ULD DIMENSIONS	LATERAL POSITION
LD-1 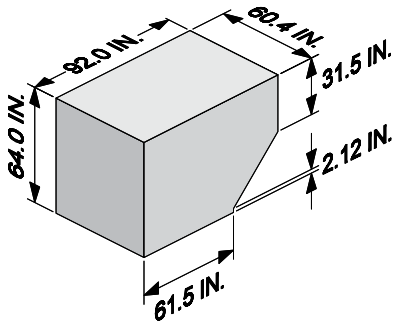	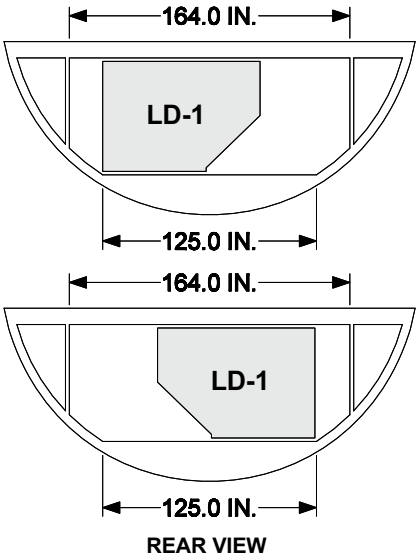
LD-3 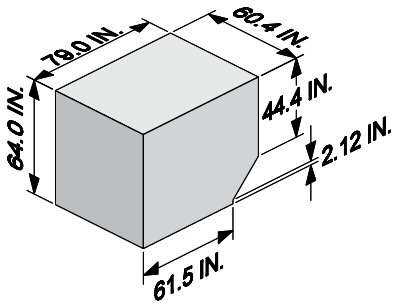	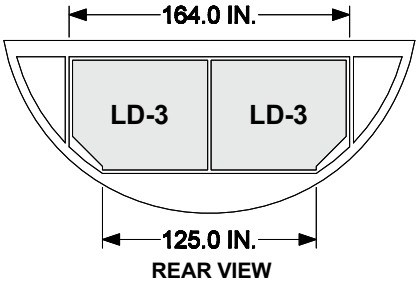
LD-3 Pallet 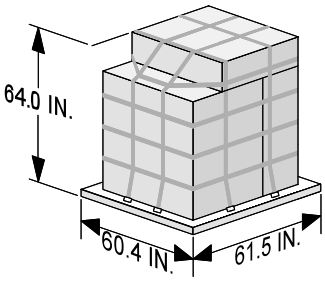	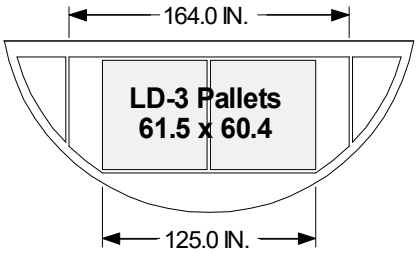

APPLICABLE CONFIGURATIONS
D

BOEING PROPRIETARY
Export Controlled by ECCN 9E991

UNIT LOAD DEVICES - LOWER DECK (Continued)

Size Code K (Continued)

ULD DIMENSIONS	LATERAL POSITION
LD-3-45 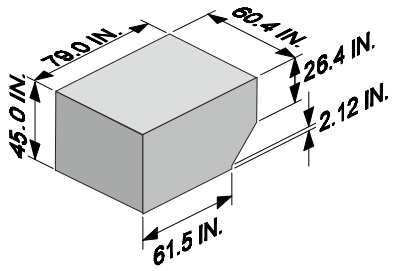 	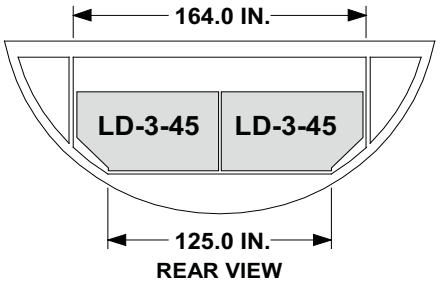
LD-3-45W 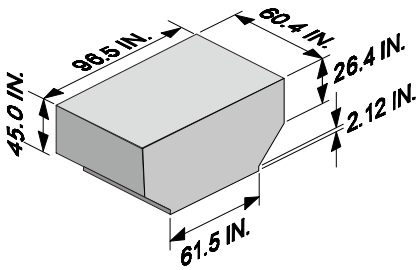 	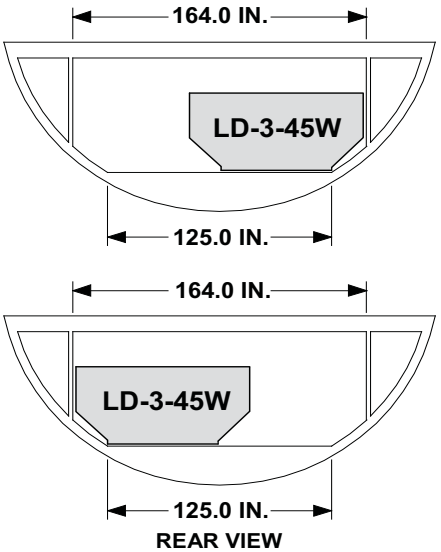

APPLICABLE CONFIGURATIONS
D

BOEING PROPRIETARY
Export Controlled by ECCN 9E991

UNIT LOAD DEVICES - LOWER DECK (Continued)

Size Code L

ULD DIMENSIONS	LATERAL POSITION
LD-5 LD-11 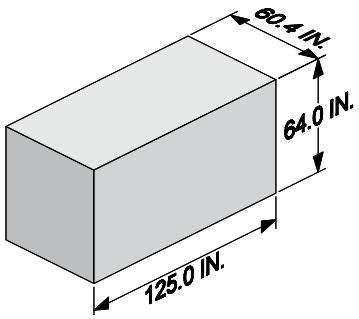	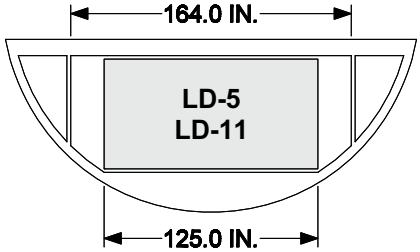 REAR VIEW
LD-6 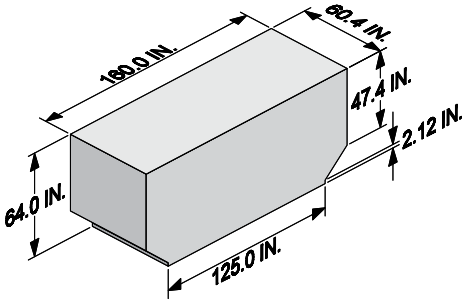	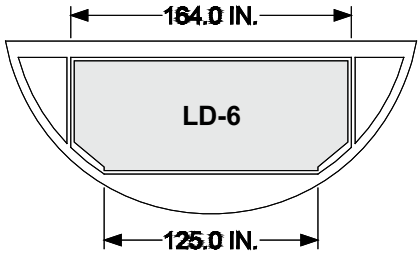 REAR VIEW
LD-10 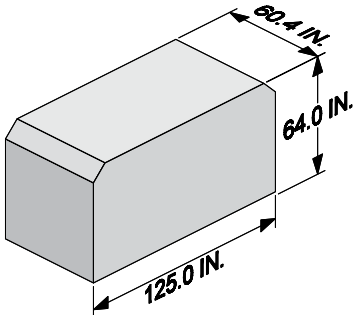	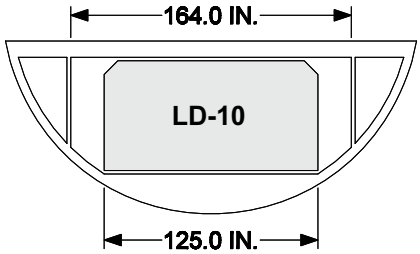 REAR VIEW
Half Pallet 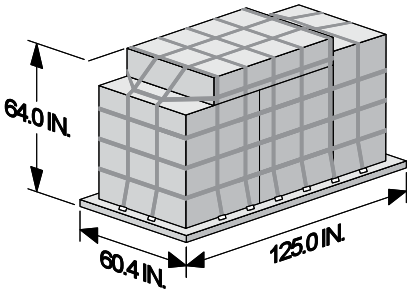	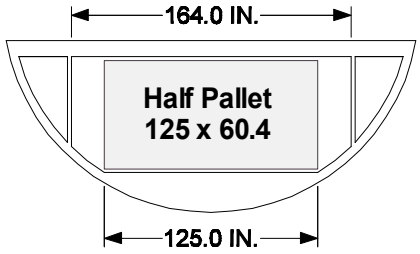 REAR VIEW

APPLICABLE CONFIGURATIONS
D

BOEING PROPRIETARY
Export Controlled by ECCN 9E991

UNIT LOAD DEVICES - LOWER DECK (Continued)

Size Code P

ULD DIMENSIONS	LATERAL POSITION
LD-2 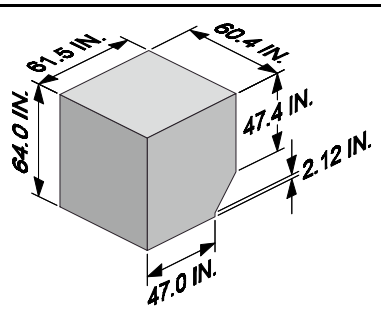	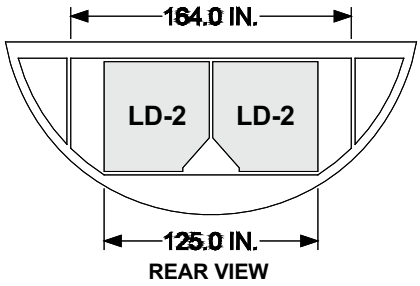

Size Code Q

ULD DIMENSIONS	LATERAL POSITION
LD-4 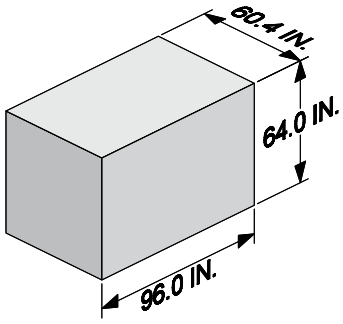	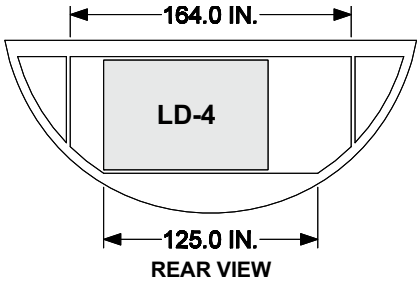
LD-8 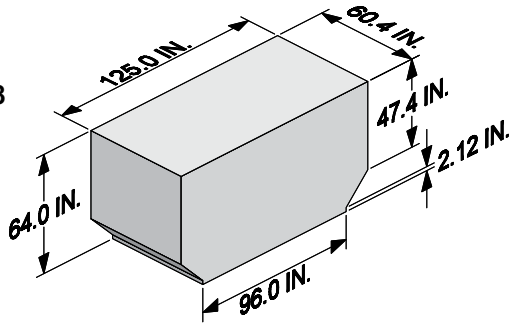	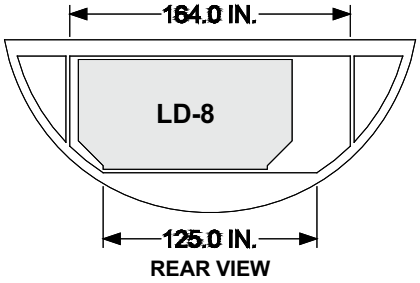

APPLICABLE CONFIGURATIONS
D

BOEING PROPRIETARY
Export Controlled by ECCN 9E991

UNIT LOAD DEVICES - LOWER DECK

SIZE CODES A, M, N AND Q LONGITUDINAL

A Unit Load Device (ULD) is a device for grouping and retaining cargo for transit. The ULD can refer to a pallet and net, a pallet and net over an igloo, or a container. This Chapter-Section-Subject provides volume, center of gravity limits, dimensions, and lateral positions for size code A, M, N and Q ULDs.

Size Code A, M, N and Q certified ULDs conform to TSO-C90 which is a Technical Standard Order (TSO) from the FAA.

Non-certified Size Code A, M, N and Q ULDs can be carried provided all of the following considerations are observed. Otherwise, they must be tied down per CHP-SEC 1-68-00x:

1. The non-certified ULD must be serviceable, well constructed, and loaded in a manner that will prevent it or its cargo from becoming a hazard to the airplane structure or systems under operational loads.
2. The non-certified ULD must match the external profiles of the allowable certified ULDs shown in this section. Non-certified ULDs that are less than 63 inches high require tie-downs for the ULD's gross weight.
3. The non-certified ULD must engage the restraint hardware similar to a certified ULD. Load limitations associated with missing/inoperative restraints must be observed in the same manner as for certified ULDs to prevent damage to the restraint equipment or its local support structure.

Use of ULDs that are not specified in this manual requires tiedowns for the ULD's gross weight. See CHP-SEC 1-68-00x.

APPLICABLE CONFIGURATIONS
All

BOEING PROPRIETARY
Export Controlled by ECCN 9E991

UNIT LOAD DEVICES - LOWER DECK (Continued)

VOLUMES AND CENTER OF GRAVITY LIMITS

The design capacities of the support fittings and structure have been established within an allowable center of gravity range as shown in the table below.

DESIGNATION		BASE DIMENSION IN.	VOLUME CU FT	ALLOWABLE CENTER OF GRAVITY RANGE IN.		
SIZE CODE	COMMON			VERTICAL	LATERAL	LONGITUDINAL
A	P1	88 x 125	381	36.0	± 12.5	± 8.8
	LD-7		381	36.0	± 12.5	± 8.8
	LD-9		381	36.0	± 12.5	± 8.8
M	P6	96 x 125	407	36.0	± 12.5	± 9.6
	LD-36		512	36.0	± 12.5	± 9.6
N	Half Pallet	96 x 61.5	194	36.0	± 6.1	± 9.6
Q	LD-4	96 x 60.4	200	34.0	± 6.0	± 9.6
	LD-8		252	34.0	± 6.0	± 9.6

The allowable center of gravity range is based on the geometric center of the unit load device base dimension. The vertical center of gravity is measured from the base of the container. Good judgement must be used in distributing the load within the unit load device.

Use of ULDs that are not specified in this manual requires tiedowns for the ULD's gross weight and the specified load factors.

CAUTIONS

- UNIT LOAD DEVICES WHICH DO NOT SATISFY THE PRECEDING REQUIREMENTS MUST BE RESTRAINED BY TIEDOWNS AS SPECIFIED IN CHP-SEC 1-68-0xx, CARGO TIEDOWNS.
- CARGO CARRIED IN A ULD THAT IS OF SHAPE AND/OR DENSITY THAT COULD BECOME A HAZARD TO THE AIRPLANE STRUCTURE OR SYSTEMS UNDER OPERATIONAL LOADS (E.G. DENSE OR PIERCING ITEMS THAT COULD BECOME PROJECTILES) MUST BE TIED DOWN TO THE ULD.
- UNIT LOAD DEVICES LESS THAN 63 INCHES IN HEIGHT THAT ARE NOT VERTICALLY RESTRAINED MUST BE RESTRAINED BY TIEDOWNS AS SPECIFIED IN CHP-SEC 1-68-0xx.
- TO REDUCE INADVERTENT CARGO MOVEMENT, IT IS RECOMMENDED THAT ALL AVAILABLE RESTRAINTS, INCLUDING LATERAL GUIDES, IN UNOCCUPIED POSITIONS BE RAISED.

APPLICABLE CONFIGURATIONS
All

BOEING PROPRIETARY
Export Controlled by ECCN 9E991

UNIT LOAD DEVICES - LOWER DECK (Continued)

DIMENSIONS AND LATERAL POSITIONS

The external dimensions and lateral positions of size code A, M, N and Q Longitudinal unit load devices in the lower hold are provided in the following illustrations (refer to CHP-SEC 1-69-xxx for actual lateral locations).

Size Code A

ULD DIMENSIONS	LATERAL POSITION
P1 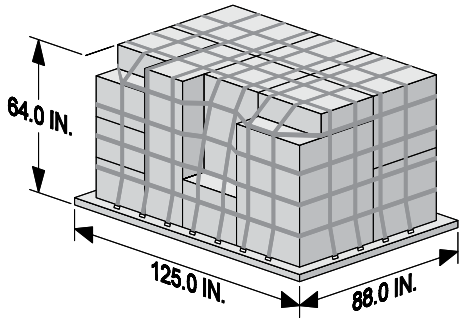	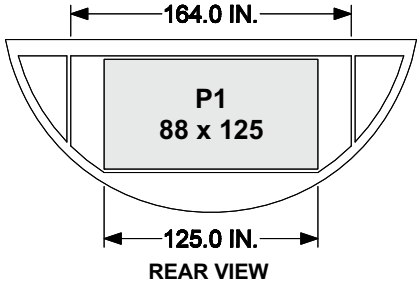
LD-7 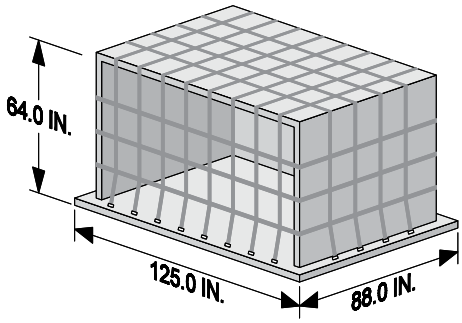	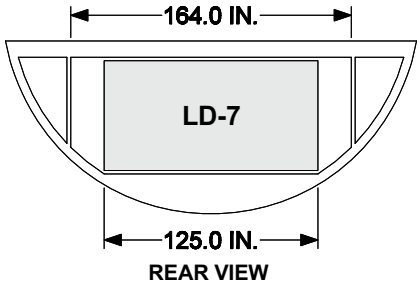
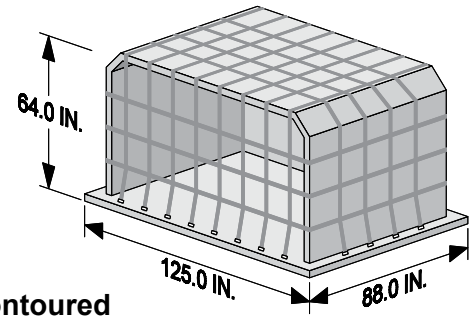 Contoured	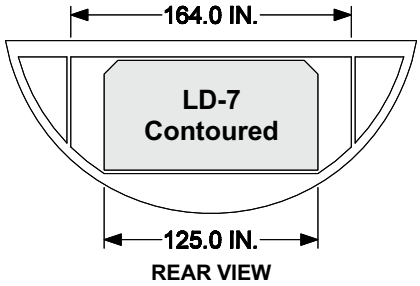

APPLICABLE CONFIGURATIONS
All

BOEING PROPRIETARY
Export Controlled by ECCN 9E991

UNIT LOAD DEVICES - LOWER DECK (Continued)

ULD DIMENSIONS	LATERAL POSITION
LD-9 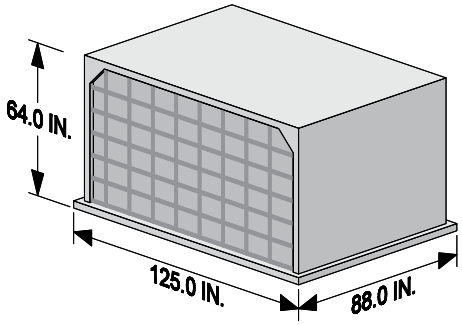	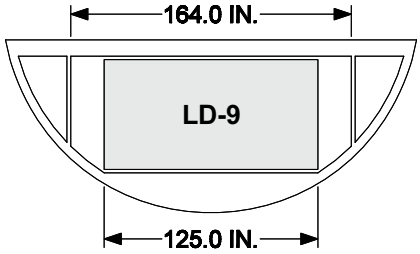 REAR VIEW
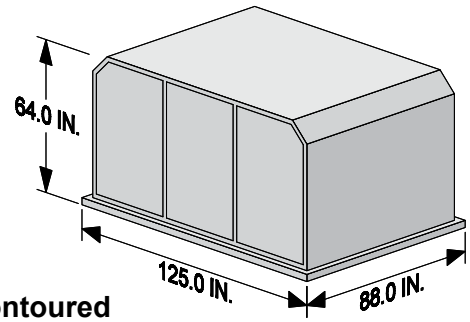 Contoured	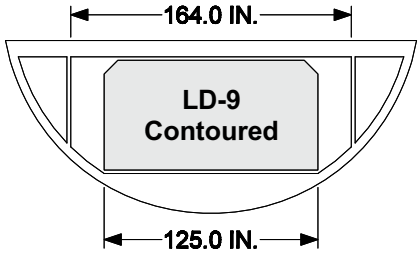 REAR VIEW

Size Code M

P6 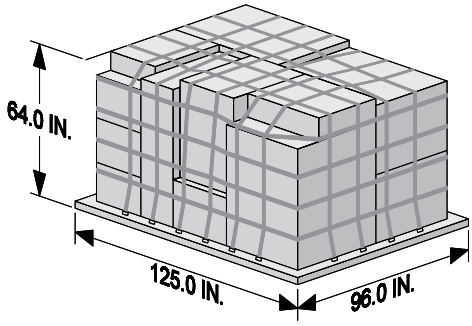	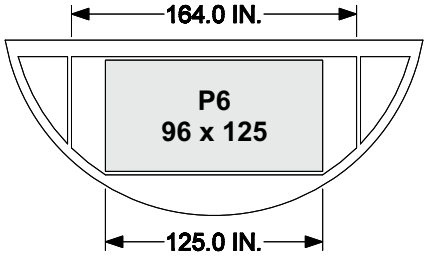 REAR VIEW
LD-36 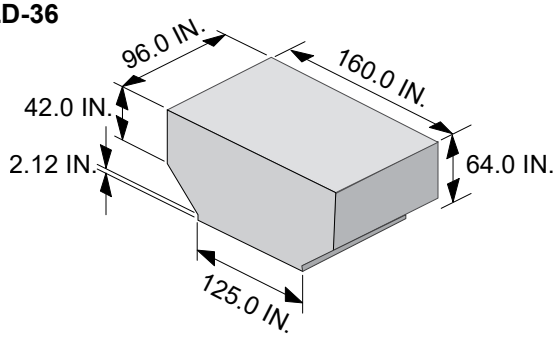	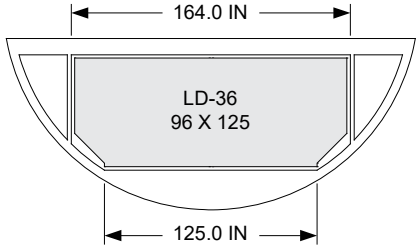 REAR VIEW

APPLICABLE CONFIGURATIONS
All

BOEING PROPRIETARY
Export Controlled by ECCN 9E991

UNIT LOAD DEVICES - LOWER DECK (Continued)

Size Code N

ULD DIMENSIONS	LATERAL POSITION
Half Pallet 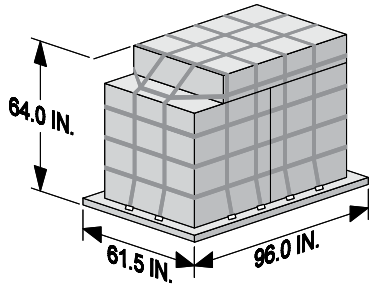	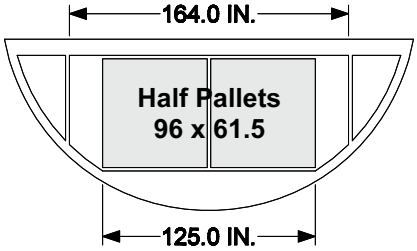

Size Code Q Longitudinal

ULD DIMENSIONS	LATERAL POSITION
LD-4 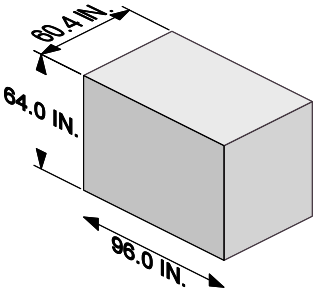	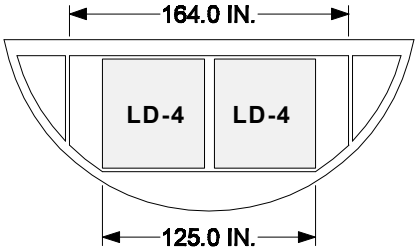
LD-8 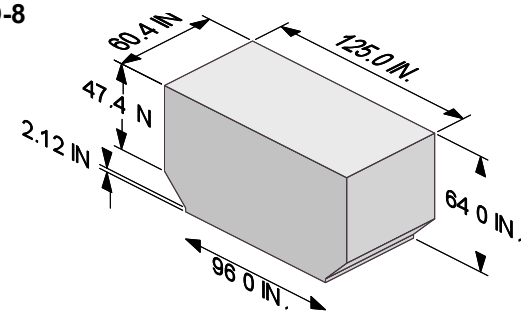	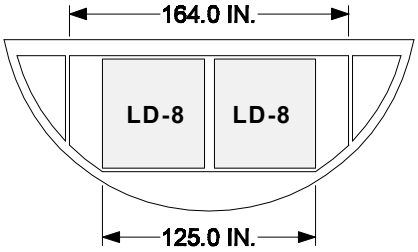

APPLICABLE CONFIGURATIONS
All

BOEING PROPRIETARY
Export Controlled by ECCN 9E991

FORWARD COMPARTMENT UNIT LOAD DEVICE LOCATIONS

SIZE CODES K & L

The illustration below shows the allowable positions in the forward compartment for size code K & L unit load devices.

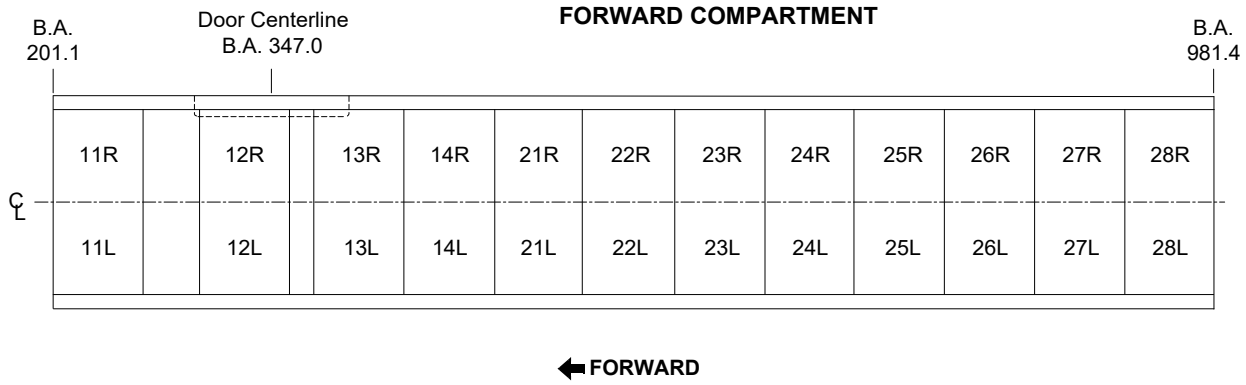

Assuming a uniformly distributed load for the positions shown in the above illustration, the following table tabulates the center of gravity for each individual position, and provides the resultant center of gravity for the total of all positions shown.

FORWARD COMPARTMENT UNIT LOAD DEVICE LOCATION CENTERS OF GRAVITY - SIZE CODES K & L			
ULD POSITION	BALANCE ARM - IN.		
	POSITION	COMPARTMENT	TOTAL
11L & 11R	231.4	358.6	612.2
12L & 12R	329.6		
13L & 13R	406.5		
14L & 14R	466.9		
21L & 21R	527.3	739.0	
22L & 22R	587.7		
23L & 23R	648.1		
24L & 24R	708.6		
25L & 25R	769.2		
26L & 26R	829.8		
27L & 27R	890.4		
28L & 28R	951.1		

APPLICABLE CONFIGURATIONS
A, B, C, E, F

BOEING PROPRIETARY
Export Controlled by ECCN 9E991

FORWARD COMPARTMENT UNIT LOAD DEVICE LOCATIONS (Continued)

SIZE CODES K & L ALTERNATE

The illustration below shows the alternate allowable positions in the forward compartment for size code K & L unit load devices.

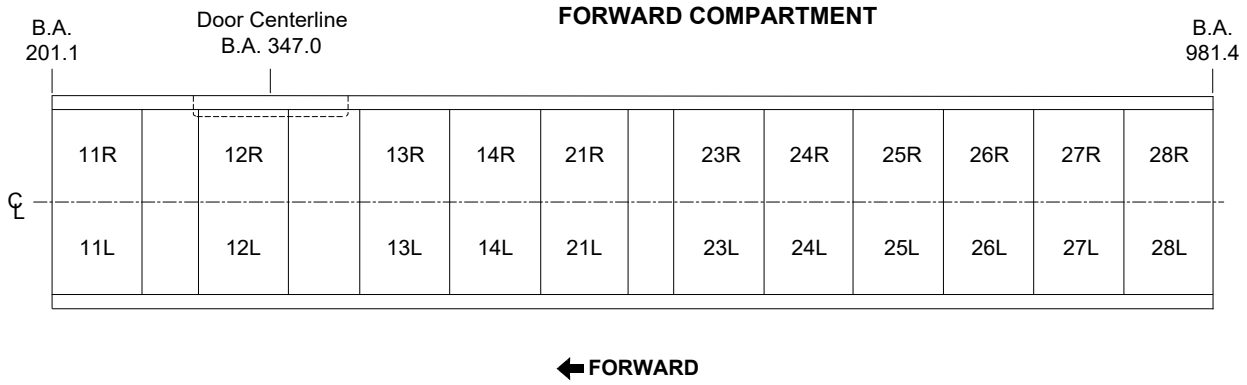

Assuming a uniformly distributed load for the positions shown in the above illustration, the following table tabulates the center of gravity for each individual position, and provides the resultant center of gravity for the total of all positions shown.

FORWARD COMPARTMENT UNIT LOAD DEVICE LOCATION CENTERS OF GRAVITY - SIZE CODES K & L			
ULD POSITION	BALANCE ARM - IN.		
	POSITION	COMPARTMENT	TOTAL
11L & 11R	231.4	375.0	623.4
12L & 12R	329.6		
13L & 13R	439.1		
14L & 14R	499.7		
21L & 21R	560.4	765.4	
23L & 23R	648.1		
24L & 24R	708.6		
25L & 25R	769.2		
26L & 26R	829.8		
27L & 27R	890.4		
28L & 28R	951.1		

APPLICABLE CONFIGURATIONS
A, B, C, E, F

BOEING PROPRIETARY
Export Controlled by ECCN 9E991

FORWARD COMPARTMENT UNIT LOAD DEVICE LOCATIONS (Continued)

SIZE CODE P

The illustration below shows the allowable positions in the forward compartment for size code P unit load devices. Refer to CHP-SEC 1-66-0xx for restrictions on size code P unit load device intermixing with size codes K and L.

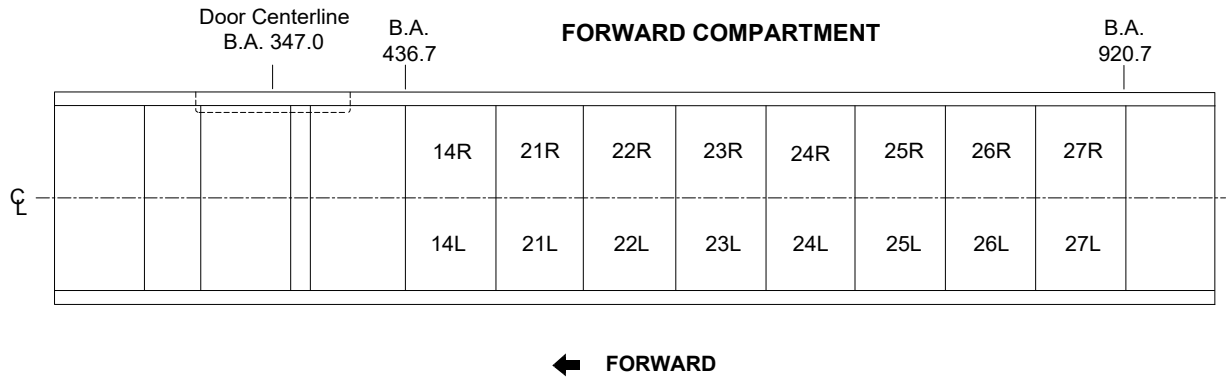

Assuming a uniformly distributed load for the positions shown in the above illustration, the following table tabulates the center of gravity for each individual position, and provides the resultant center of gravity for the total of all positions shown.

FORWARD COMPARTMENT UNIT LOAD DEVICE LOCATION CENTERS OF GRAVITY - SIZE CODE P		
ULD POSITION	BALANCE ARM - IN.	
	POSITION	TOTAL
14L & 14R	466.9	678.5
21L & 21R	527.3	
22L & 22R	587.7	
23L & 23R	648.1	
24L & 24R	708.6	
25L & 25R	769.2	
26L & 26R	829.8	
27L & 27R	890.4	

Size code P unit load devices must be paired with another size code P or a size code K (LD-3) unit load device, and must be loaded with their protrusions facing the airplane centerline. Furthermore, size code P unit load devices must be loaded within a string of unit load devices. They must not occupy the first, last or doorway position of the string.

APPLICABLE CONFIGURATIONS
A, B, C, E, F

BOEING PROPRIETARY
Export Controlled by ECCN 9E991

FORWARD COMPARTMENT UNIT LOAD DEVICE LOCATIONS (Continued)

SIZE CODE P ALTERNATE

The illustration below shows alternate allowable positions in the forward compartment for Size Code P unit load devices when Size Code K and L unit load devices are loaded in the alternate configuration. Refer to CHP-SEC 1-66-00x for restrictions on Size Code P unit load devices intermixed with Size Code K and L unit load devices.

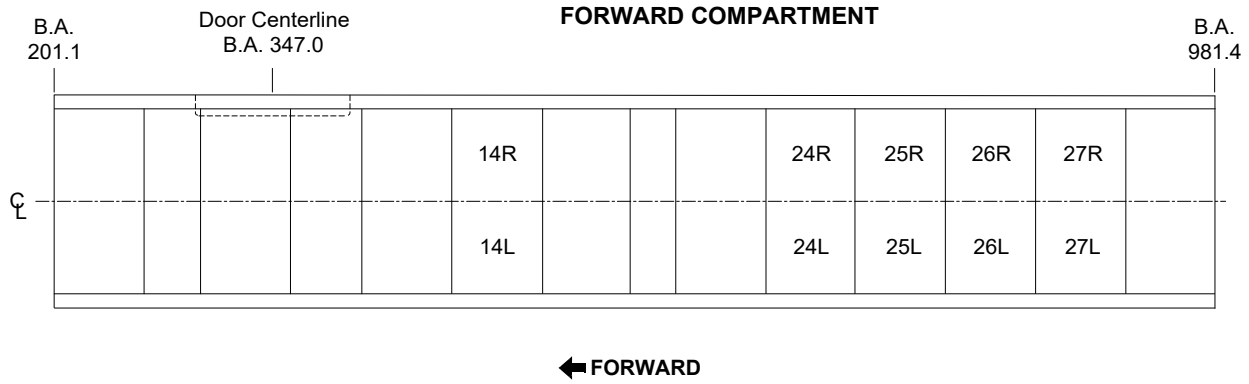

Assuming a uniformly distributed load for the positions shown in the above illustration, the following table tabulates the center of gravity for each individual position, and provides the resultant center of gravity for the total of all positions shown.

FORWARD COMPARTMENT UNIT LOAD DEVICE LOCATION CENTERS OF GRAVITY - SIZE CODE P		
ULD POSITION	BALANCE ARM - IN.	
	POSITION	TOTAL
14L & 14R	499.7	739.5
24L & 24R	708.6	
25L & 25R	769.2	
26L & 26R	829.8	
27L & 27R	890.4	

Size Code P unit load devices must be paired with another Size Code P or a Size Code K (LD-3) unit load device, and must be loaded with their protrusions facing the airplane centerline. Furthermore, Size Code P unit load devices must be loaded within a string of unit load devices. They must not occupy the first, last or doorway position of the string.

APPLICABLE CONFIGURATIONS
A, B, C, E, F

BOEING PROPRIETARY
Export Controlled by ECCN 9E991

FORWARD COMPARTMENT UNIT LOAD DEVICE LOCATIONS

SIZE CODES K & L

The illustration below shows the allowable positions in the forward compartment for Size Code K & L unit load devices.

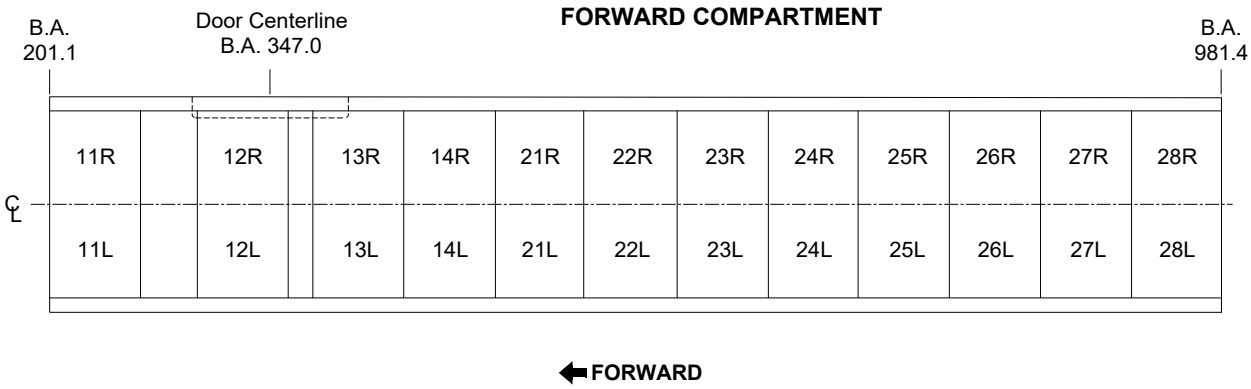

Assuming a uniformly distributed load for the positions shown in the above illustration, the following table tabulates the center of gravity for each individual position, and provides the resultant center of gravity for the total of all positions shown.

FORWARD COMPARTMENT UNIT LOAD DEVICE LOCATION CENTERS OF GRAVITY - SIZE CODES K & L			
ULD POSITION	BALANCE ARM - IN.		
	POSITION	COMPARTMENT	TOTAL
11L & 11R	231.4	358.6	612.2
12L & 12R	329.6		
13L & 13R	406.5		
14L & 14R	466.9		
21L & 21R	527.3	739.0	
22L & 22R	587.7		
23L & 23R	648.1		
24L & 24R	708.6		
25L & 25R	769.2		
26L & 26R	829.8		
27L & 27R	890.4		
28L & 28R	951.1		

APPLICABLE CONFIGURATIONS
D

BOEING PROPRIETARY
Export Controlled by ECCN 9E991

FORWARD COMPARTMENT UNIT LOAD DEVICE LOCATIONS (Continued)

SIZE CODES K & L ALTERNATE ONE

The illustration below shows alternate allowable positions in the forward compartment for Size Code K & L unit load devices.

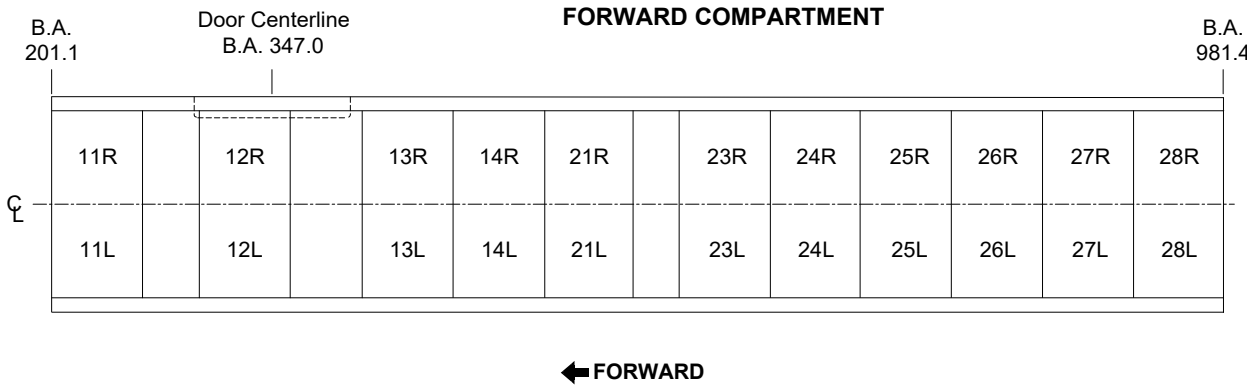

Assuming a uniformly distributed load for the positions shown in the above illustration, the following table tabulates the center of gravity for each individual position, and provides the resultant center of gravity for the total of all positions shown.

FORWARD COMPARTMENT UNIT LOAD DEVICE LOCATION CENTERS OF GRAVITY - SIZE CODES K & L			
ULD POSITION	BALANCE ARM - IN.		
	POSITION	COMPARTMENT	TOTAL
11L & 11R	231.4	375.0	623.4
12L & 12R	329.6		
13L & 13R	439.1		
14L & 14R	499.7		
21L & 21R	560.4	765.4	
23L & 23R	648.1		
24L & 24R	708.6		
25L & 25R	769.2		
26L & 26R	829.8		
27L & 27R	890.4		
28L & 28R	951.1		

APPLICABLE CONFIGURATIONS
D

BOEING PROPRIETARY
Export Controlled by ECCN 9E991

FORWARD COMPARTMENT UNIT LOAD DEVICE LOCATIONS (Continued)

SIZE CODES K & L ALTERNATE TWO

The illustration below shows alternate allowable positions in the forward compartment for Size Code K & L unit load devices.

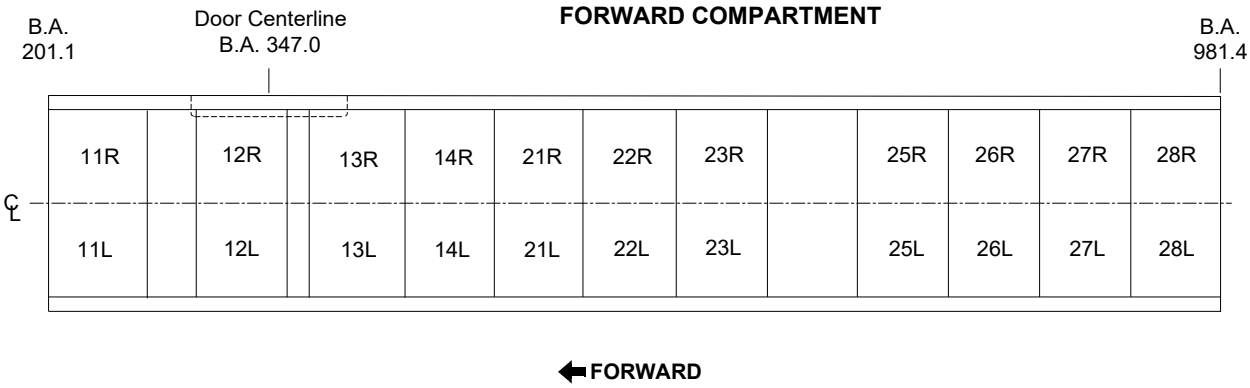

Assuming a uniformly distributed load for the positions shown in the above illustration, the following table tabulates the center of gravity for each individual position, and provides the resultant center of gravity for the total of all positions shown.

FORWARD COMPARTMENT UNIT LOAD DEVICE LOCATION CENTERS OF GRAVITY - SIZE CODES K & L			
ULD POSITION	BALANCE ARM - IN.		
	POSITION	COMPARTMENT	TOTAL
11L & 11R	231.4	358.6	603.5
12L & 12R	329.6		
13L & 13R	406.5		
14L & 14R	466.9		
21L & 21R	527.3	743.4	
22L & 22R	587.7		
23L & 23R	648.1		
25L & 25R	769.2		
26L & 26R	829.8		
27L & 27R	890.4		
28L & 28R	951.1		

APPLICABLE CONFIGURATIONS
D

BOEING PROPRIETARY
Export Controlled by ECCN 9E991

FORWARD COMPARTMENT UNIT LOAD DEVICE LOCATIONS (Continued)

SIZE CODES P

The illustration below shows the allowable positions in the forward compartment for Size Code P unit load devices. Refer to CHP-SEC 1-66-0xx for restrictions on Size Code P unit load device intermixing with Size Codes K and L.

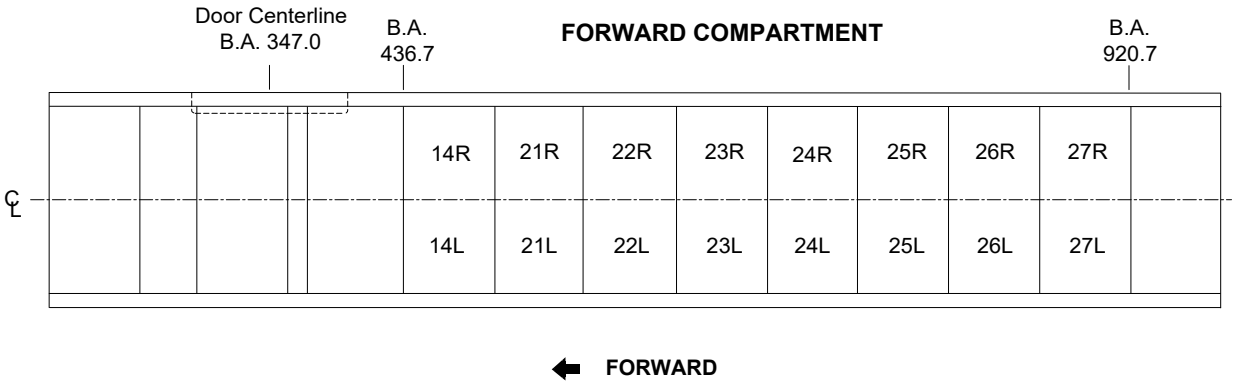

Assuming a uniformly distributed load for the positions shown in the above illustration, the following table tabulates the center of gravity for each individual position, and provides the resultant center of gravity for the total of all positions shown.

FORWARD COMPARTMENT UNIT LOAD DEVICE LOCATION CENTERS OF GRAVITY - SIZE CODES K & L		
ULD POSITION	BALANCE ARM - IN.	
	POSITION	TOTAL
14L & 14R	466.9	678.5
21L & 21R	527.3	
22L & 22R	587.7	
23L & 23R	648.1	
24L & 24R	708.6	
25L & 25R	769.2	
26L & 26R	829.8	
27L & 27R	890.4	

Size Code P unit load devices must be paired with another Size Code P or a Size Code K (LD-3) unit load device, and must be loaded with their protrusions facing the airplane centerline. Furthermore, Size Code P unit load devices must be loaded within a string of unit load devices. They must not occupy the first, last or doorway position of the string.

APPLICABLE CONFIGURATIONS
D

BOEING PROPRIETARY
Export Controlled by ECCN 9E991

FORWARD COMPARTMENT UNIT LOAD DEVICE LOCATIONS (Continued)

SIZE CODE P ALTERNATE ONE

The illustration below shows alternate allowable positions in the forward compartment for Size Code P unit load devices when Size Code K and L unit load devices are loaded in alternate one configuration. Refer to CHP-SEC 1-66-00x for restrictions on Size Code P unit load devices intermixed with Size Code K and L unit load devices.

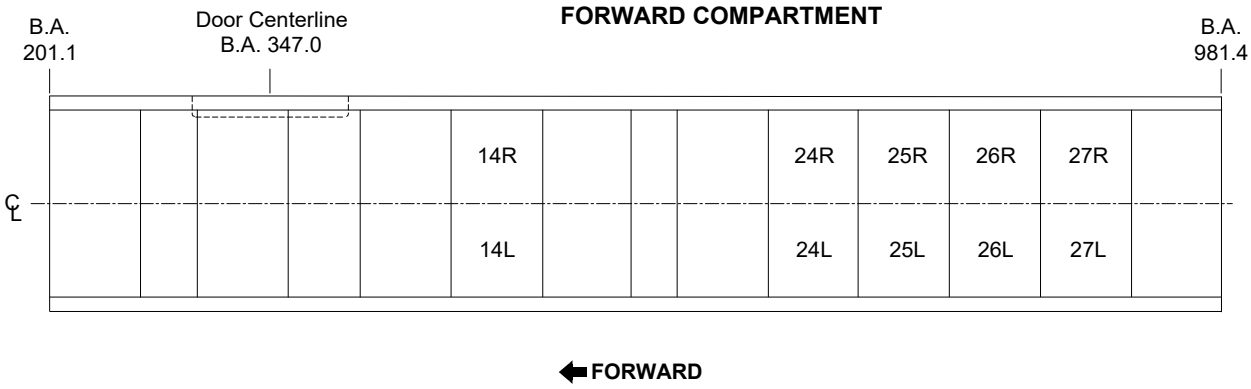

Assuming a uniformly distributed load for the positions shown in the above illustration, the following table tabulates the center of gravity for each individual position, and provides the resultant center of gravity for the total of all positions shown.

FORWARD COMPARTMENT UNIT LOAD DEVICE LOCATION CENTERS OF GRAVITY - SIZE CODE P		
ULD POSITION	BALANCE ARM - IN.	
	POSITION	TOTAL
14L & 14R	499.7	739.5
24L & 24R	708.6	
25L & 25R	769.2	
26L & 26R	829.8	
27L & 27R	890.4	

Size Code P unit load devices must be paired with another Size Code P or a Size Code K (LD-3) unit load device, and must be loaded with their protrusions facing the airplane centerline. Furthermore, Size Code P unit load devices must be loaded within a string of unit load devices. They must not occupy the first, last or doorway position of the string.

APPLICABLE CONFIGURATIONS
D

BOEING PROPRIETARY
Export Controlled by ECCN 9E991

FORWARD COMPARTMENT UNIT LOAD DEVICE LOCATIONS (Continued)

SIZE CODE P ALTERNATE TWO

The illustration below shows alternate allowable positions in the forward compartment for Size Code P unit load devices. When Size Code K & L unit load devices are loaded in alternate two configuration refer to CHP-SEC 1-66-0xx for restrictions on Size Code P unit load device intermixing with Size Codes K and L unit load devices.

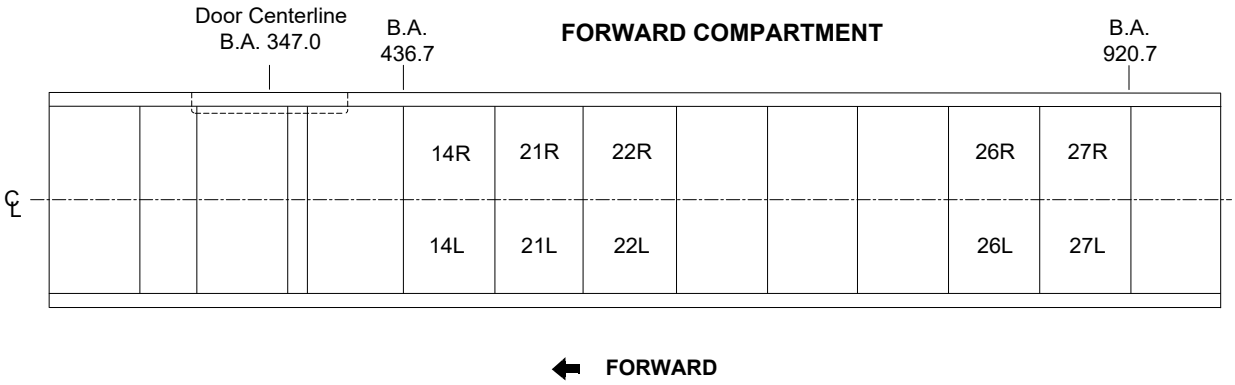

Assuming a uniformly distributed load for the positions shown in the above illustration, the following table tabulates the center of gravity for each individual position, and provides the resultant center of gravity for the total of all positions shown.

FORWARD COMPARTMENT UNIT LOAD DEVICE LOCATION CENTERS OF GRAVITY - SIZE CODE P		
ULD POSITION	BALANCE ARM - IN.	
	POSITION	TOTAL
14L & 14R	466.9	660.4
21L & 21R	527.3	
22L & 22R	587.7	
26L & 26R	829.8	
27L & 27R	890.4	

Size Code P unit load devices must be paired with another Size Code P or a Size Code K (LD-3) unit load device, and must be loaded with their protrusions facing the airplane centerline. Furthermore, Size Code P unit load devices must be loaded within a string of unit load devices. They must not occupy the first, last or doorway position of the string.

APPLICABLE CONFIGURATIONS
D

BOEING PROPRIETARY
Export Controlled by ECCN 9E991

FORWARD COMPARTMENT UNIT LOAD DEVICE LOCATIONS

SIZE CODE A

The illustration below shows the allowable positions in the forward compartment for size code A unit load devices.

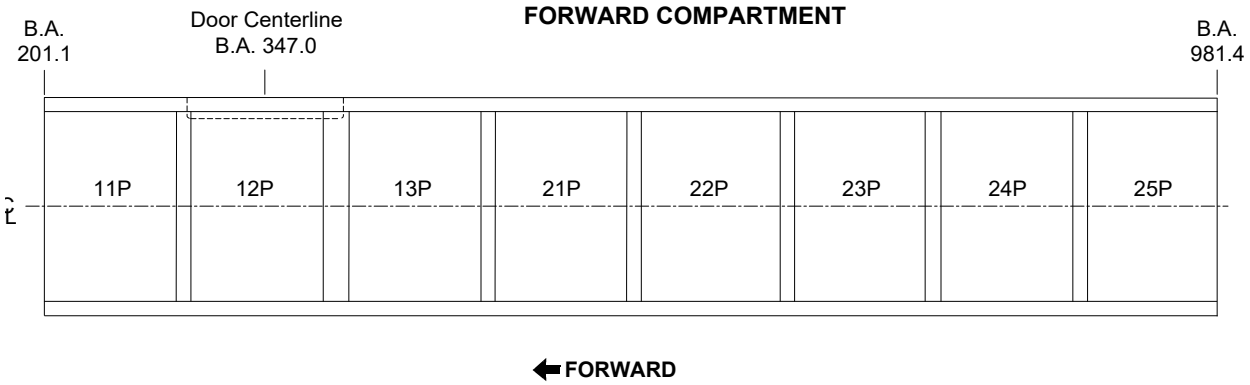

Assuming a uniformly distributed load for the positions shown in the above illustration, the following table tabulates the center of gravity for each individual position, and provides the resultant center of gravity for the total of all positions shown.

FORWARD COMPARTMENT UNIT LOAD DEVICE LOCATION CENTERS OF GRAVITY - SIZE CODE A			
ULD POSITION	BALANCE ARM - IN.		
	POSITION	COMPARTMENT	TOTAL
11P	245.2	345.8	593.4
12P	343.2		
13P	448.9		
21P	546.6	741.9	
22P	644.2		
23P	741.9		
24P	839.6		
25P	937.3		

APPLICABLE CONFIGURATIONS
All

BOEING PROPRIETARY
Export Controlled by ECCN 9E991

FORWARD COMPARTMENT UNIT LOAD DEVICE LOCATIONS (Continued)

SIZE CODES M & N

The illustration below shows the allowable positions in the forward compartment for size code M & N unit load devices.

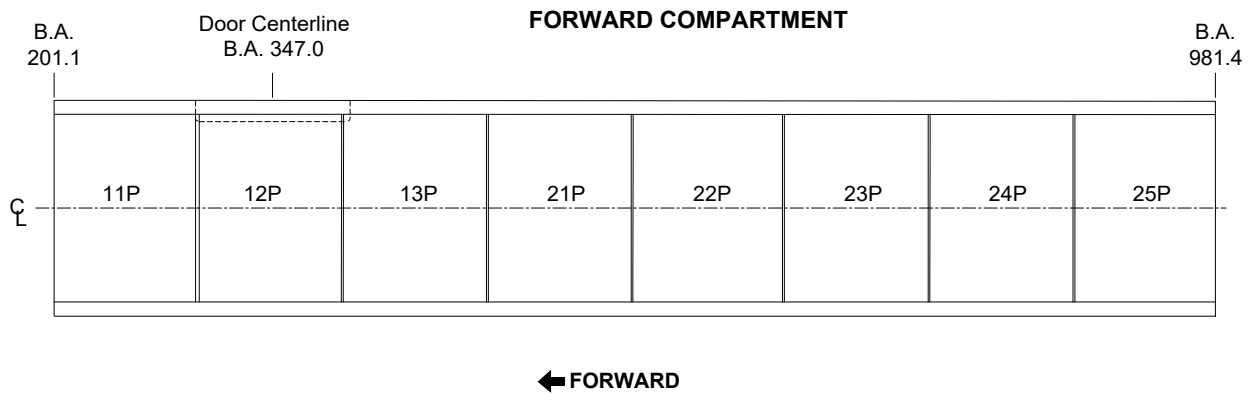

Assuming a uniformly distributed load for the positions shown in the above illustration, the following table tabulates the center of gravity for each individual position, and provides the resultant center of gravity for the total of all positions shown.

FORWARD COMPARTMENT UNIT LOAD DEVICE LOCATION CENTERS OF GRAVITY - SIZE CODES M & N			
ULD POSITION	BALANCE ARM - IN.		
	POSITION	COMPARTMENT	TOTAL
11P	249.2	347.1	591.4
12P	347.2		
13P	444.9		
21P	542.6	737.9	
22P	640.2		
23P	737.9		
24P	835.6		
25P	933.3		

NOTE To carry size code N unit load devices in position 12P the airplane must be loaded in pallet mode with the retractable guide roller and aft row of lateral guides retracted.

APPLICABLE CONFIGURATIONS
All

BOEING PROPRIETARY
Export Controlled by ECCN 9E991

FORWARD COMPARTMENT UNIT LOAD DEVICE LOCATIONS (Continued)

SIZE CODE Q (LD-4) LONGITUDINAL

The illustration below shows the allowable positions in the forward compartment for size code Q (LD-4) unit load devices.

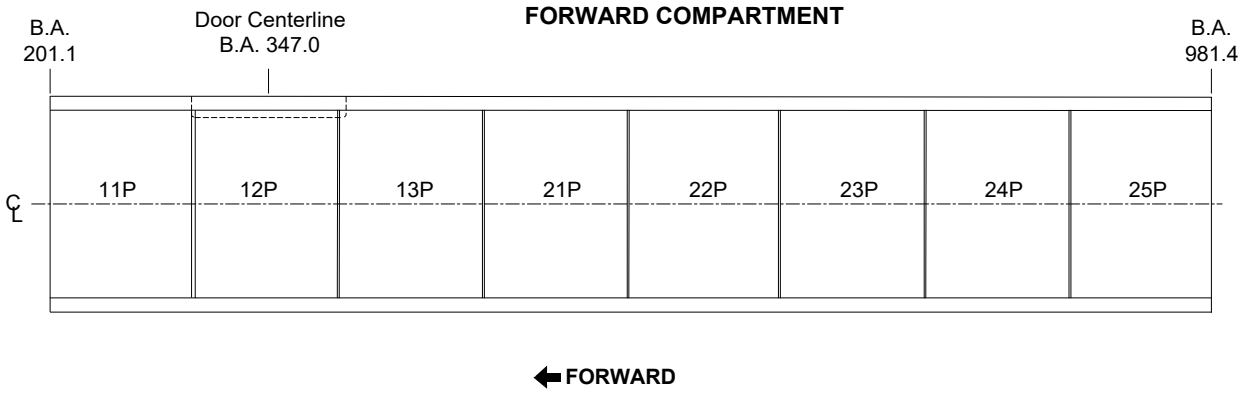

Assuming a uniformly distributed load for the positions shown in the above illustration, the following table tabulates the center of gravity for each individual position, and provides the resultant center of gravity for the total of all positions shown.

FORWARD COMPARTMENT UNIT LOAD DEVICE LOCATION CENTERS OF GRAVITY - SIZE CODE Q (LD-4) LONGITUDINAL			
ULD POSITION	BALANCE ARM - IN.		
	POSITION	COMPARTMENT	TOTAL
11P	249.2	347.1	591.4
12P	347.2		
13P	444.9		
21P	542.6	737.9	
22P	640.2		
23P	737.9		
24P	835.6		
25P	933.3		

APPLICABLE CONFIGURATIONS
All

BOEING PROPRIETARY
Export Controlled by ECCN 9E991

FORWARD COMPARTMENT UNIT LOAD DEVICE LOCATIONS (Continued)

SIZE CODE Q (LD-8) LONGITUDINAL

There are two configurations for size code Q (LD-8) positioned longitudinally. The illustration below shows one configuration for allowable positions in the forward compartment for size code Q (LD-8) unit load devices.

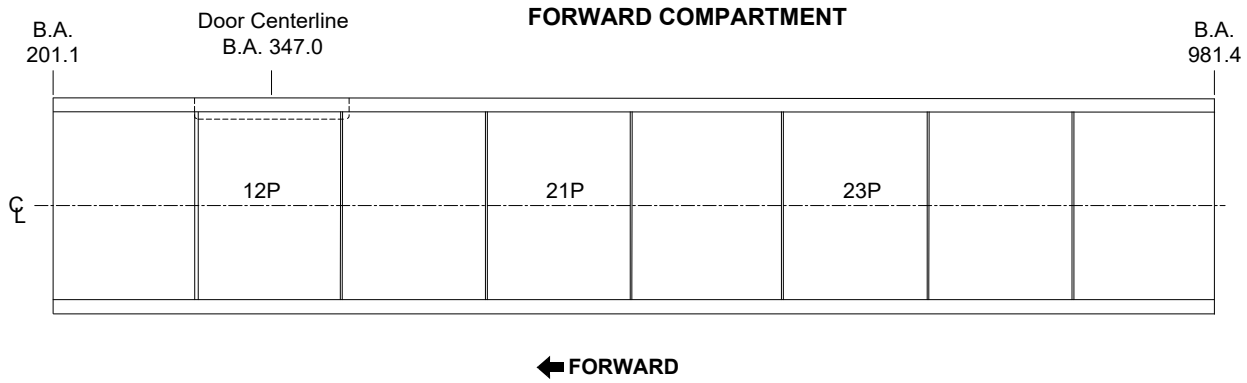

Assuming a uniformly distributed load for the positions shown in the above illustration, the following table tabulates the center of gravity for each individual position, and provides the resultant center of gravity for the total of all positions shown.

FORWARD COMPARTMENT UNIT LOAD DEVICE LOCATION CENTERS OF GRAVITY - SIZE CODE Q (LD-8) LONGITUDINAL			
ULD POSITION	BALANCE ARM - IN.		
	POSITION	COMPARTMENT	TOTAL
12P	347.2	347.2	542.6
21P	542.6	640.3	
23P	737.9		

APPLICABLE CONFIGURATIONS
All

BOEING PROPRIETARY
Export Controlled by ECCN 9E991

FORWARD COMPARTMENT UNIT LOAD DEVICE LOCATIONS (Continued)

The illustration below shows the other configuration for allowable positions in the forward compartment for size code Q (LD-8) unit load devices.

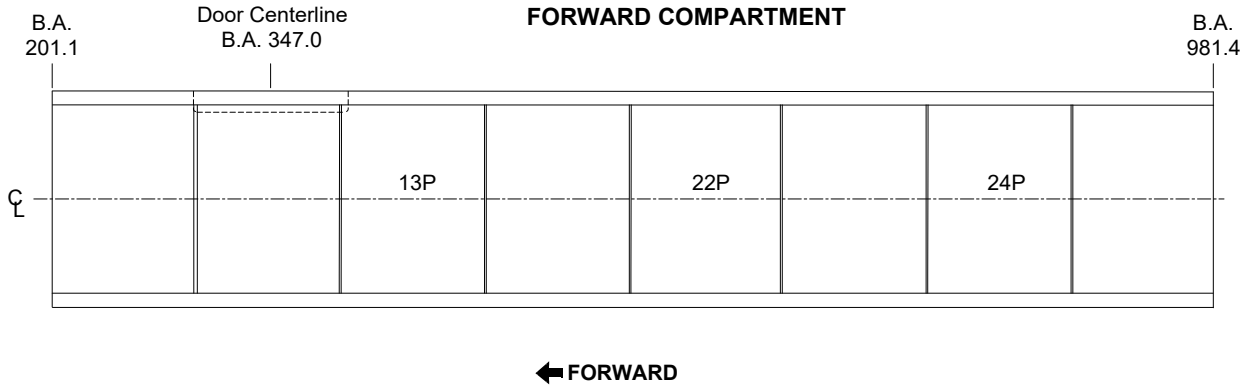

Assuming a uniformly distributed load for the positions shown in the above illustration, the following table tabulates the center of gravity for each individual position, and provides the resultant center of gravity for the total of all positions shown.

FORWARD COMPARTMENT UNIT LOAD DEVICE LOCATION CENTERS OF GRAVITY - SIZE CODE Q (LD-8) LONGITUDINAL			
ULD POSITION	BALANCE ARM - IN.		
	POSITION	COMPARTMENT	TOTAL
13P	444.9	444.9	640.2
22P	640.2	737.9	
24P	835.6		

APPLICABLE CONFIGURATIONS
All

BOEING PROPRIETARY
Export Controlled by ECCN 9E991

AFT COMPARTMENT UNIT LOAD DEVICE LOCATIONS

SIZE CODES K & L

The illustration below shows the allowable positions in the aft compartment for size code K & L unit load devices.

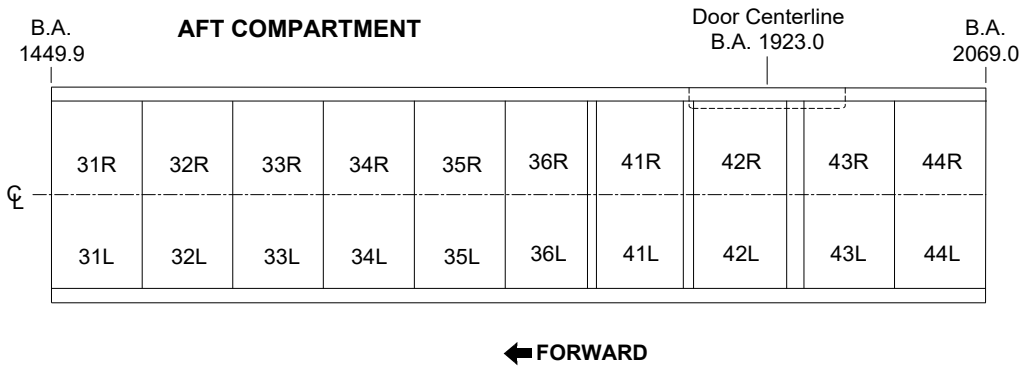

Assuming a uniformly distributed load for the positions shown in the above illustration, the following table tabulates the center of gravity for each individual position, and provides the resultant center of gravity for the total of all positions shown.

AFT COMPARTMENT UNIT LOAD DEVICE LOCATION CENTERS OF GRAVITY - SIZE CODES K & L			
ULD POSITION	BALANCE ARM - IN.		
	POSITION	COMPARTMENT	TOTAL
31L & 31R	1480.3	1631.8	1755.6
32L & 32R	1540.9		
33L & 33R	1601.5		
34L & 34R	1662.1		
35L & 35R	1722.7		
36L & 36R	1783.2		
41L & 41R[a]	1843.4	1941.4	
42L & 42R	1905.6		
43L & 43R	1978.0		
44L & 44R	2038.7		

[a] This position is available when loading size code A ULDs.

APPLICABLE CONFIGURATIONS
A, B, C, E, F

BOEING PROPRIETARY
Export Controlled by ECCN 9E991

AFT COMPARTMENT UNIT LOAD DEVICE LOCATIONS (Continued)

SIZE CODE P

The illustration below shows the allowable positions in the aft compartment for size code P unit load devices. Refer to CHP-SEC 1-66-0xx for restrictions on size code P unit load device intermixing with size codes K and L.

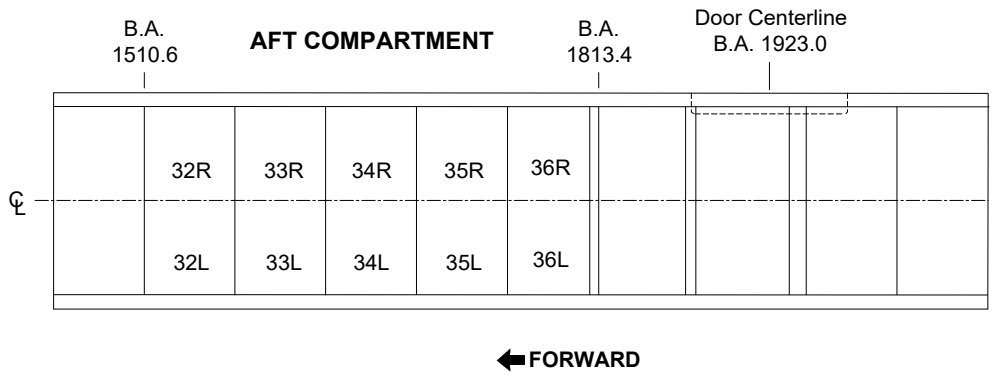

Assuming a uniformly distributed load for the positions shown in the above illustration, the following table tabulates the center of gravity for each individual position, and provides the resultant center of gravity for the total of all positions shown.

AFT COMPARTMENT UNIT LOAD DEVICE LOCATION CENTERS OF GRAVITY - SIZE CODE P		
ULD POSITION	BALANCE ARM - IN.	
	POSITION	TOTAL
32L & 32R	1540.9	1662.1
33L & 33R	1601.5	
34L & 34R	1662.1	
35L & 35R	1722.7	
36L & 36R	1783.2	

Size code P unit load devices must be paired with another size code P or a size code K (LD-3) unit load device, and must be loaded with their protrusions facing the airplane centerline. Furthermore, size code P unit load devices must be loaded within a string of unit load devices. They must not occupy the first, last or doorway position of the string.

APPLICABLE CONFIGURATIONS
A, B, C, E, F

BOEING PROPRIETARY
Export Controlled by ECCN 9E991

AFT COMPARTMENT UNIT LOAD DEVICE LOCATIONS

SIZE CODES K, L & Q

The illustration below shows the allowable positions in the aft compartment for size code K, L & Q unit load devices.

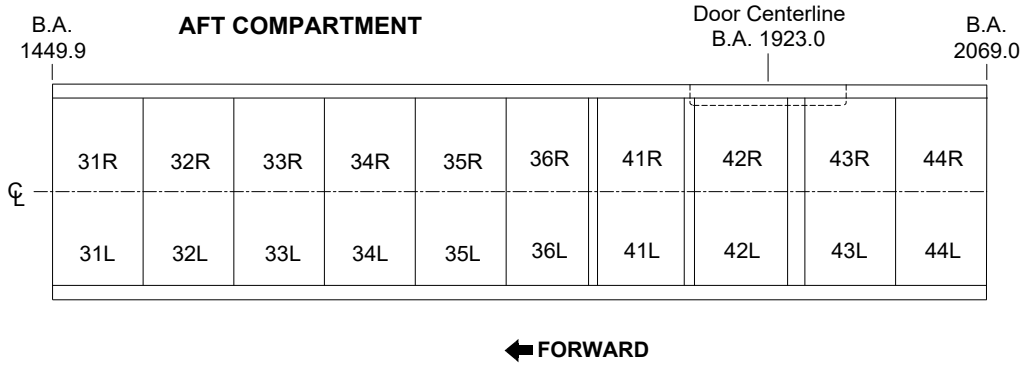

Assuming a uniformly distributed load for the positions shown in the above illustration, the following table tabulates the center of gravity for each individual position, and provides the resultant center of gravity for the total of all positions shown.

AFT COMPARTMENT UNIT LOAD DEVICE LOCATION CENTERS OF GRAVITY - SIZE CODES K, L & Q			
ULD POSITION	BALANCE ARM - IN.		
	POSITION	COMPARTMENT	TOTAL
31L & 31R	1480.3	1631.8	1755.6
32L & 32R	1540.9		
33L & 33R	1601.5		
34L & 34R	1662.1		
35L & 35R	1722.7		
36L & 36R	1783.2		
41L & 41R[a]	1843.4	1941.4	
42L & 42R	1905.6		
43L & 43R	1978.0		
44L & 44R	2038.7		

[a] This position is available when loading size code A ULDs.

APPLICABLE CONFIGURATIONS
D

BOEING PROPRIETARY
Export Controlled by ECCN 9E991

AFT COMPARTMENT UNIT LOAD DEVICE LOCATIONS (Continued)

SIZE CODE P

The illustration below shows the allowable positions in the aft compartment for size code P unit load devices. Refer to CHP-SEC 1-66-0xx for restrictions on size code P unit load device intermixing with size codes K, L & Q.

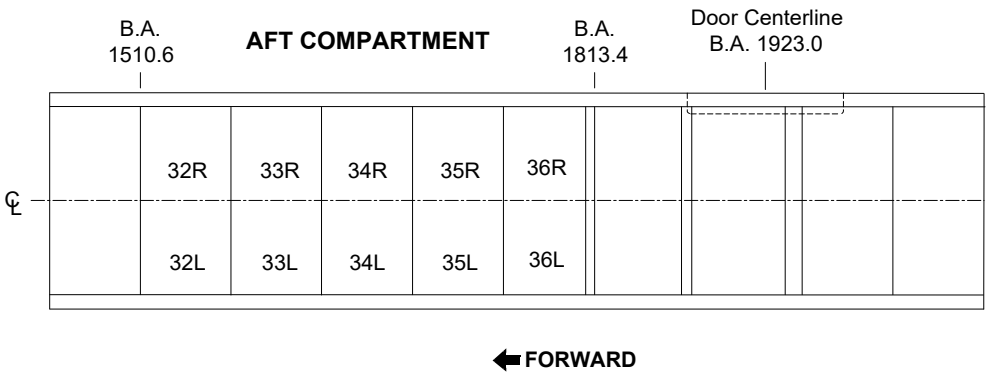

Assuming a uniformly distributed load for the positions shown in the above illustration, the following table tabulates the center of gravity for each individual position, and provides the resultant center of gravity for the total of all positions shown.

AFT COMPARTMENT UNIT LOAD DEVICE LOCATION CENTERS OF GRAVITY - SIZE CODE P		
ULD POSITION	BALANCE ARM - IN.	
	POSITION	TOTAL
32L & 32R	1540.9	1662.1
33L & 33R	1601.5	
34L & 34R	1662.1	
35L & 35R	1722.7	
36L & 36R	1783.2	

Size code P unit load devices must be paired with another size code P or a size code K (LD-3) unit load device, and must be loaded with their protrusions facing the airplane centerline. Furthermore, size code P unit load devices must be loaded within a string of unit load devices. They must not occupy the first, last or doorway position of the string.

APPLICABLE CONFIGURATIONS
D

BOEING PROPRIETARY
Export Controlled by ECCN 9E991

AFT COMPARTMENT UNIT LOAD DEVICE LOCATIONS

SIZE CODE A

The illustration below shows the allowable positions in the aft compartment for size code A unit load devices.

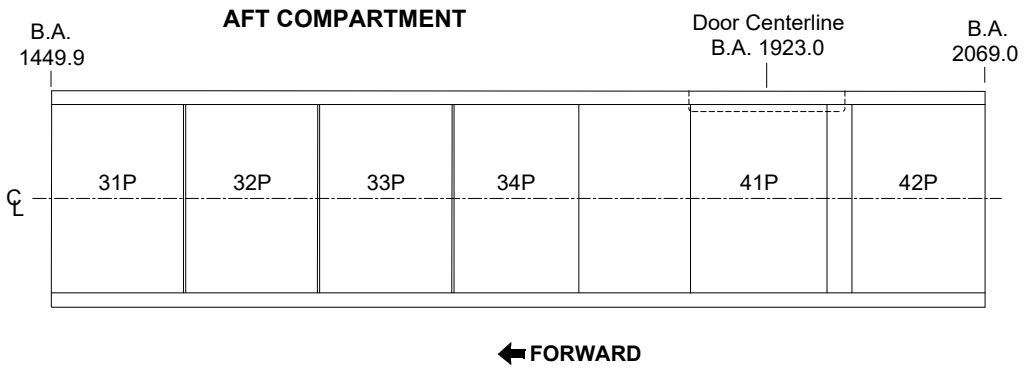

Assuming a uniformly distributed load for the positions shown in the above illustration, the following table tabulates the center of gravity for each individual position, and provides the resultant center of gravity for the total of all positions shown.

AFT COMPARTMENT UNIT LOAD DEVICE LOCATION CENTERS OF GRAVITY - SIZE CODE A			
ULD POSITION	BALANCE ARM - IN.		
	POSITION	COMPARTMENT	TOTAL
31P	1494.0	1628.5	1742.8
32P	1583.7		
33P	1673.4		
34P	1763.0		
41P	1918.3	1971.5	
42P	2024.6		

NOTE A size code K or L unit load device can be loaded between positions 34P and 41P. Refer to CHP-SEC 1-64-6xx for balance arm.

APPLICABLE CONFIGURATIONS
All

BOEING PROPRIETARY
Export Controlled by ECCN 9E991

AFT COMPARTMENT UNIT LOAD DEVICE LOCATIONS (Continued)

SIZE CODES M & N

The illustration below shows the allowable positions in the aft compartment for size code M & N unit load devices.

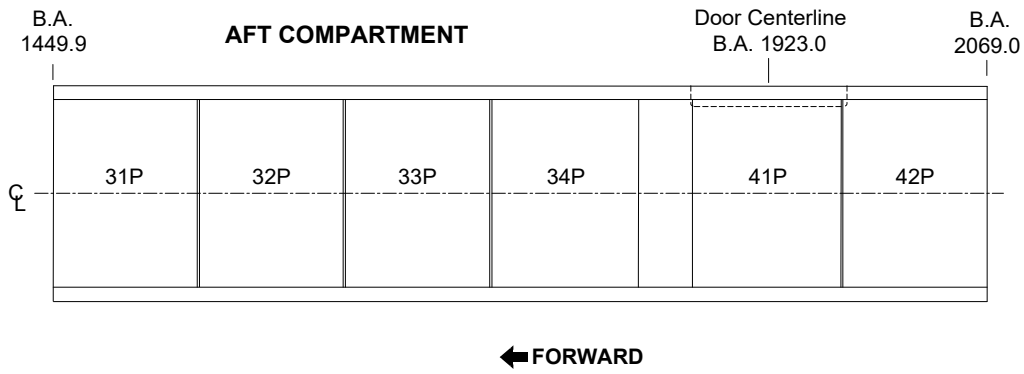

Assuming a uniformly distributed load for the positions shown in the above illustration, the following table tabulates the center of gravity for each individual position, and provides the resultant center of gravity for the total of all positions shown.

AFT COMPARTMENT UNIT LOAD DEVICE LOCATION CENTERS OF GRAVITY - SIZE CODES M & N			
ULD POSITION	BALANCE ARM - IN.		
	POSITION	COMPARTMENT	TOTAL
31P	1498.0	1644.5	1753.5
32P	1595.7		
33P	1693.4		
34P	1791.0		
41P	1922.3	1971.6	
42P	2020.9		

NOTE To carry size code N unit load devices in position 41P the airplane must be loaded in pallet mode with the retractable guide roller and aft row of lateral guides retracted.

APPLICABLE CONFIGURATIONS
All

BOEING PROPRIETARY
Export Controlled by ECCN 9E991

AFT COMPARTMENT UNIT LOAD DEVICE LOCATIONS (Continued)

SIZE CODE Q (LD-4) LONGITUDINAL

The illustration below shows the allowable positions in the aft compartment for size code Q (LD-4) unit load devices.

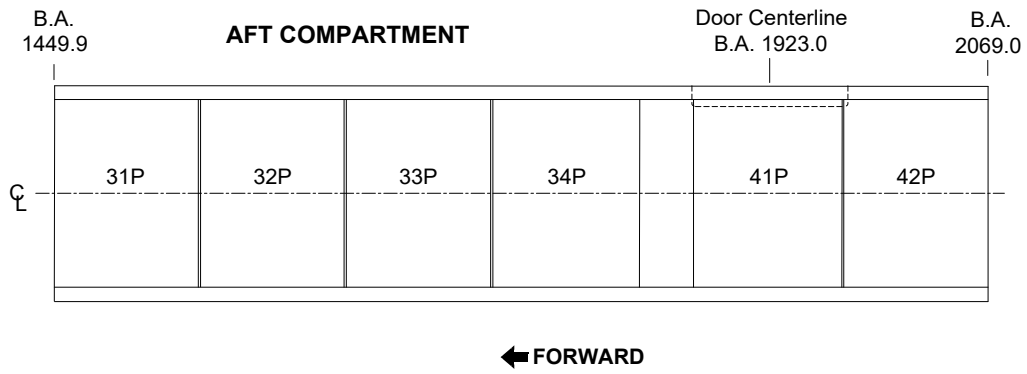

Assuming a uniformly distributed load for the positions shown in the above illustration, the following table tabulates the center of gravity for each individual position, and provides the resultant center of gravity for the total of all positions shown.

AFT COMPARTMENT UNIT LOAD DEVICE LOCATION CENTERS OF GRAVITY - SIZE CODE Q (LD-4) LONGITUDINAL			
ULD POSITION	BALANCE ARM - IN.		
	POSITION	COMPARTMENT	TOTAL
31P	1498.0	1644.5	1753.5
32P	1595.7		
33P	1693.4		
34P	1791.0		
41P	1922.3	1971.6	
42P	2020.9		

APPLICABLE CONFIGURATIONS
All

BOEING PROPRIETARY
Export Controlled by ECCN 9E991

AFT COMPARTMENT UNIT LOAD DEVICE LOCATIONS (Continued)

SIZE CODE Q (LD-8) LONGITUDINAL

There are two configurations for size code Q (LD-8) positioned longitudinally. The illustration below shows one configuration for allowable positions in the aft compartment for size code Q (LD-8) unit load devices.

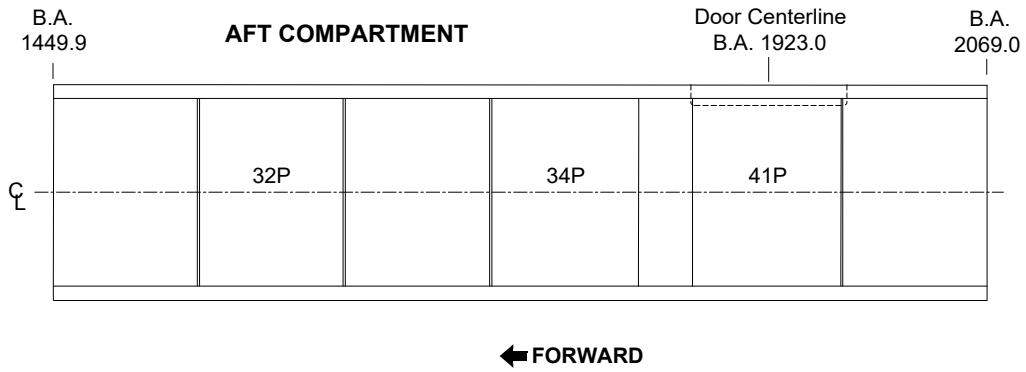

Assuming a uniformly distributed load for the positions shown in the above illustration, the following table tabulates the center of gravity for each individual position, and provides the resultant center of gravity for the total of all positions shown.

AFT COMPARTMENT UNIT LOAD DEVICE LOCATION CENTERS OF GRAVITY - SIZE CODE Q (LD-4) LONGITUDINAL			
ULD POSITION	BALANCE ARM - IN.		
	POSITION	COMPARTMENT	TOTAL
32P	1595.7	1693.4	1769.7
34P	1791.0		
41P	1922.3	1922.3	

APPLICABLE CONFIGURATIONS
All

BOEING PROPRIETARY
Export Controlled by ECCN 9E991

AFT COMPARTMENT UNIT LOAD DEVICE LOCATIONS (Continued)

The illustration below shows the other configuration for allowable positions in the aft compartment for size code Q (LD-8) unit load devices.

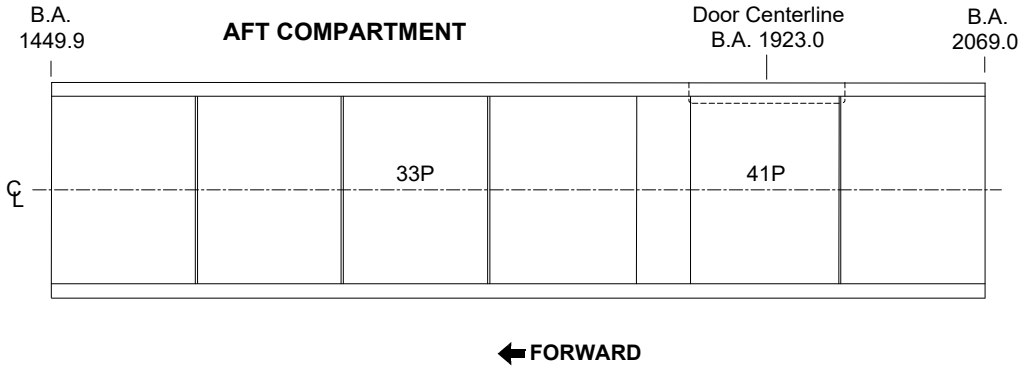

Assuming a uniformly distributed load for the positions shown in the above illustration, the following table tabulates the center of gravity for each individual position, and provides the resultant center of gravity for the total of all positions shown.

AFT COMPARTMENT UNIT LOAD DEVICE LOCATION CENTERS OF GRAVITY - SIZE CODE Q (LD-4) LONGITUDINAL			
ULD POSITION	BALANCE ARM - IN.		
	POSITION	COMPARTMENT	TOTAL
33P	1693.4	1693.4	1807.9
41P	1922.3	1922.3	

APPLICABLE CONFIGURATIONS
All

BOEING PROPRIETARY
Export Controlled by ECCN 9E991

FORWARD COMPARTMENT UNIT LOAD DEVICE LOAD LIMITS

CARGO RESTRAINT SYSTEM - SIZE CODES K, L, & P

The longitudinal area between each combination of fwd / aft restraints is referred to as a zone. All zones in a cargo compartment are unique, and all restraints within the boundaries of a zone are either down or inoperable. The illustration below identifies the locations of the stops / locks / guides and the associated zones for Size Codes K, L, & P.

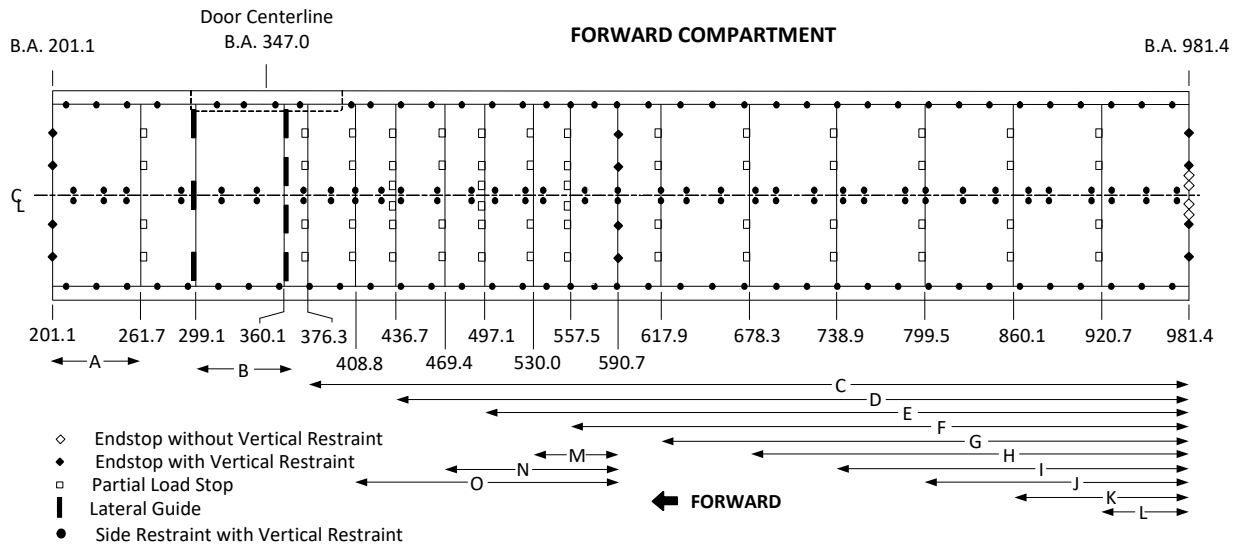

Unit Load Device Intermixing

Size Codes K, L, & P ULDs can be intermixed in the cargo compartments, provided that:

- Pallet profile less than LD3-45 must not occupy the first or last position of the string, not allowing other ULDs to overcome the pallet during a forward or aft shift.
- Code size P must not occupy the first, last or doorway position of the string.
- LD-2 containers are paired with another LD-2 or LD-3 container within a string.
- Intermixing of non-certified ULDs must engage the cargo restraint system similar to a certified pallet, and have sufficient strength and rigidity to maintain that engagement under load.
- Non-certified ULDs are greater than 63 inches in height.

If a fwd / aft restraint is broken or inoperative, ULDs can still be intermixed provided:

- The allowable zonal load per the missing restraint section is not exceeded.
- Do not place a pair of LD-2 containers (side by side) against inoperative restraints when intermixing ULDs.

Size Codes K, L & P ULDs can be intermixed in Zone O, provided that one Size Code L, or two Size Code K containers are located against the aft restraints. One Size Code K may be loaded against the aft restraints if the other side of Zone O is empty.

APPLICABLE CONFIGURATIONS
A, B, C, E, F

BOEING PROPRIETARY
Export Controlled by ECCN 9E991

FORWARD COMPARTMENT UNIT LOAD DEVICE LOAD LIMITS (Continued)

LOAD LIMITS - SIZE CODES K, L, & P

The remaining sections of this subject describe loading considerations, restraint systems, missing or inoperable restraints, and provide maximum allowable loads for each restraint direction under various operational conditions.

Loading Considerations

The allowable weight for each zone is a function of the type of ULD that comes in contact with the forward and aft restraints, the load factors, and by the restraint and ULD capabilities.

CAUTION ENSURE THERE IS SUFFICIENT CLEARANCE BETWEEN THE TOP OF THE CARGO AND THE CARGO BAY CEILING WHILE LOADING AND UNLOADING CARGO. DAMAGE TO THE AIRPLANE CAN OCCUR IF THERE IS NOT SUFFICIENT VERTICAL CLEARANCE.

NOTE Airplanes with the -300ER nose landing gear move differently during loading and unloading than other 777 model airplanes.

Unless otherwise stated, the following guidelines must be followed to determine allowable loads in a zone.

- The operator determines the number of restraints available for each zone.
- The allowable zone weight includes ULD tare. Any load in excess of the allowables specified herein must be restrained by additional tiedowns (refer to CHP-SEC 1-68-00x for tiedown information).
- Allowable weights may further be restricted by limitations in this manual.
- Restraints at the fwd and aft end of a string of containers may be missing at the same time. However, the most limiting allowable zonal load for a missing fwd or aft restraint must be used.
- Missing / inoperative restraints in the same direction cannot be adjacent (i.e. two adjacent side restraints or two adjacent vertical restraints at the forward or aft side of the ULD may not be missing or inoperative). Also, two restraints adjacent to a common corner cannot be missing / inoperable. If this condition exists, the allowable weight of the associated zone is 0 LB (0 KG).
- LD-2 containers must be paired with another LD-2 or LD-3 container.
- LD-2 containers must be loaded in a string and must not occupy the first, last or doorway positions.
- A pair of LD-2's or paired LD-2 and LD-3 containers loaded in a unstrung zone, must be tied down.
- To reduce inadvertent cargo movement, it is recommended that all available restraints, including lateral guides, in unoccupied positions be raised.
- A maximum of two missing or inoperative restraints (one on the left side and one on the right side of the airplane) are allowed in each restraint direction.

APPLICABLE CONFIGURATIONS
A, B, C, E, F

BOEING PROPRIETARY
Export Controlled by ECCN 9E991

FORWARD COMPARTMENT UNIT LOAD DEVICE LOAD LIMITS (Continued)

- For any ULD, restraints used to react the load in the inboard / outboard directions may not be missing / inoperative if restraints in the fwd / aft directions are also missing / inoperative. If this condition exists, tiedowns are required.
- Pallet position P22 cannot be tied down when a single Size Code K ULD is loaded in the position immediately forward of pallet position P22.

Missing / Inoperative Restraints

Maximum loads for unit load devices shown in this section assume all equipment is installed and operable. When equipment is missing or inoperable, allowable loading may be reduced. Certain instances of missing or inoperable equipment reduce the allowable loading to zero.

CAUTION CARE MUST BE EXERCISED DURING LOADING AND UNLOADING OF UNIT LOAD DEVICES WHEN EQUIPMENT IS MISSING / INOPERATIVE TO PREVENT DAMAGE TO AIRPLANE STRUCTURE. IT IS ADVISABLE THAT MALFUNCTIONING EQUIPMENT BE REPAIRED OR REPLACED TO PREVENT DAMAGE TO OPERATIVE EQUIPMENT.

The following equipment malfunctions do not constitute a load limit restriction:

- Jammed or missing sill rollers without vertical restraint
- Jammed or missing balls in a ball mat
- Jammed or missing rollers in a roller unit
- Split Side Guide rail

Restraint systems fall into three categories: side restraints, side/vertical restraints and forward/aft restraints. Each restraint direction is considered separately when missing / inoperative restraint equipment exists (i.e. forward, aft, side left, side right and vertical loading). When a missing or inoperative restraint condition exists, the allowable weight is determined by considering each restraint direction separately and using the most limiting resultant allowable weight.

Missing / inoperative restraints must not be adjacent to each other.

NOTE An empty ULD can be carried in any position provided at least one restraint is operable in each forward, aft, side left and side right direction. In addition, ULDs less than 63 inches in height require one vertical restraint on each edge (forward, aft, side left and side right) to be operable.

BOEING PROPRIETARY
Export Controlled by ECCN 9E991

FORWARD COMPARTMENT UNIT LOAD DEVICE LOAD LIMITS (Continued)

Forward and Aft Restraints (Pounds) - Size Codes K, L, & P

The following table shows the maximum allowable zone weights, in pounds, with missing or inoperative forward / aft restraints:

MAXIMUM ALLOWABLE LOADS WITH MISSING / INOPERATIVE RESTRAINTS SIZE CODES K, L, & P - LB								
ZONE	B.A. IN.	NO. OF POSITIONS	LOAD TYPE[a]	MAXIMUM LOAD[b]	NO. OF RESTRAINTS MISSING / INOPERABLE			
					1 FWD	2 FWD[c]	1 AFT	2 AFT[c]
A	201.1 to 261.7	1	1	3500	3500	3500	3500	3500
			2	7000	7000	7000	7000	7000
B	299.1 to 360.1	1	1	3500	3500	3500	3500	3500
			2	7000	7000	7000	7000	6635
C	376.3 to 981.4	10	1	35000	29270	29270	29270	29270
			2	70000	35670	33060	70000	51890
			3	34200	29270	29270	29270	29270
			4	70000	35670	33060	70000	51890
			5	66500	29270	29270	29270	29270
D	436.7 to 981.4	9	1	31500	26330	26330	29270	29270
			2	63000	46680	35770	63000	51890
			3	30700	26330	26330	29270	29270
			4	63000	46680	35770	63000	51890
			5	59500	26330	26330	29270	29270
E	497.1 to 981.4	8	1	28000	26330	26330	28000	28000
			2	56000	46680	35770	56000	51890
			3	27200	26330	26330	27200	27200
			4	56000	46680	35770	56000	51890
			5	52500	26330	26330	29270	29270
F	557.5 to 981.4	7	1	24500	17740	17740	24500	24500
			2	49000	30730	23550	49000	49000
			3	23700	17740	17740	23700	23700
			4	49000	30730	23550	49000	49000
			5	45500	17740	17740	29270	29270
G	617.9 to 981.4	6	1	21000	17740	17740	21000	21000
			2	42000	21620	20030	42000	42000
			3	20200	17740	17740	20200	20200
			4	42000	21620	20030	42000	42000
			5	38500	17740	17740	29270	29270

APPLICABLE CONFIGURATIONS
A, B, C, E, F

BOEING PROPRIETARY
Export Controlled by ECCN 9E991

FORWARD COMPARTMENT UNIT LOAD DEVICE LOAD LIMITS (Continued)

MAXIMUM ALLOWABLE LOADS WITH MISSING / INOPERATIVE RESTRAINTS SIZE CODES K, L, & P - LB (Continued)								
ZONE	B.A. IN.	NO. OF POSITIONS	LOAD TYPE[a]	MAXIMUM LOAD[b]	NO. OF RESTRAINTS MISSING / INOPERABLE			
					1 FWD	2 FWD[c]	1 AFT	2 AFT[c]
H	678.3 to 981.4	5	1	17500	17500	17500	17500	17500
			2	35000	21620	20030	35000	35000
			3	16700	16700	16700	16700	16700
			4	35000	21620	20030	35000	35000
			5	31500	17740	17740	29270	29270
I	738.9 to 981.4	4	1	14000	14000	14000	14000	14000
			2	28000	21620	20030	28000	28000
			3	13200	13200	13200	13200	13200
			4	28000	21620	20030	28000	28000
			5	24500	17740	17740	24500	24500
J	799.5 to 981.4	3	1	10500	8830	8830	10500	10500
			2	21000	10760	9970	21000	21000
			3	9700	8830	8830	9700	9700
			4	21000	10760	9970	21000	21000
			5	17500	8830	8830	17500	17500
K	860.1 to 981.4	2	1	7000	7000	7000	7000	7000
			2	14000	10760	9970	14000	14000
			5	10500	8830	8830	10500	10500
L	920.1 to 981.4	1	1	3500	3500	3500	3500	3500
			2	7000	7000	7000	7000	7000
M	530.0 to 590.7	1	1	3500	3500	3500	3500	3500
			2	7000	7000	7000	7000	7000
N	469.4 to 590.7	2	1	7000	7000	7000	7000	7000
			2	14000	14000	14000	12800	11860
			5	10500	10500	10500	10500	10500
O	408.8 to 590.7	3	1	10500	8830	8830	10500	10500
			2	21000	10760	9970	12800	11860
			3	9700	8830	8830	9700	9700
			4	21000	10760	9970	12800	11860
			5	17500	8830	8830	10500	10500

[a] The load types are defined as follows:
1. Size Code K (load per side).
2. Size Code L.
3. Size Code K intermixed with Size Code P (load per side). Size Code K are located at both ends of a string.
4. Size Code L intermixed with Size Code K. Size Code L are located at both ends of a string.
5. Size Code L intermixed with Size Code K. Size Code K is located at one end of a string.

[b] All restraints are operational.

[c] Only one restraint may be missing from each side. Missing / inoperative restraints must not be adjacent to each other.

APPLICABLE CONFIGURATIONS
A, B, C, E, F

BOEING PROPRIETARY
Export Controlled by ECCN 9E991

FORWARD COMPARTMENT UNIT LOAD DEVICE LOAD LIMITS (Continued)

Forward and Aft Restraints (Kilograms) - Size Codes K, L, & P

The following table shows the maximum allowable zone weights, in kilograms, with missing or inoperative forward / aft restraints:

MAXIMUM ALLOWABLE LOADS WITH MISSING / INOPERATIVE RESTRAINTS SIZE CODES K, L, & P - KG								
ZONE	B.A. IN.	NO. OF POSITIONS	LOAD TYPE[a]	MAXIMUM LOAD[b]	NO. OF RESTRAINTS MISSING / INOPERABLE			
					1 FWD	2 FWD[c]	1 AFT	2 AFT[c]
A	201.1 to 261.7	1	1	1587	1587	1587	1587	1587
			2	3175	3175	3175	3175	3175
B	299.1 to 360.1	1	1	1587	1587	1587	1587	1587
			2	3175	3175	3175	3175	3009
C	376.3 to 981.4	10	1	15875	13276	13276	13276	13276
			2	31751	16179	14995	31751	23536
			3	15512	13276	13276	13276	13276
			4	31751	16179	14995	31751	23536
			5	30163	13276	13276	13276	13276
D	436.7 to 981.4	9	1	14288	11943	11943	13276	13276
			2	28576	21173	16224	28576	23536
			3	13925	11943	11943	13276	13276
			4	28576	21173	16224	28576	23536
			5	26988	11943	11943	13276	13276
E	497.1 to 981.4	8	1	12700	11943	11943	12700	12700
			2	25401	21173	16224	25401	23536
			3	12337	11943	11943	12337	12337
			4	25401	21173	16224	25401	23536
			5	23813	11943	11943	13276	13276
F	557.5 to 981.4	7	1	11113	8046	8046	11113	11113
			2	22226	13938	10682	22226	22226
			3	10750	8046	8046	10750	10750
			4	22226	13938	10682	22226	22226
			5	20638	8046	8046	13276	13276
G	617.9 to 981.4	6	1	9525	8046	8046	9525	9525
			2	19050	9806	9085	19050	19050
			3	9162	8046	8046	9162	9162
			4	19050	9806	9085	19050	19050
			5	17463	8046	8046	13276	13276

APPLICABLE CONFIGURATIONS
A, B, C, E, F

BOEING PROPRIETARY
Export Controlled by ECCN 9E991

FORWARD COMPARTMENT UNIT LOAD DEVICE LOAD LIMITS (Continued)

MAXIMUM ALLOWABLE LOADS WITH MISSING / INOPERATIVE RESTRAINTS SIZE CODES K, L, & P - KG (Continued)								
ZONE	B.A. IN.	NO. OF POSITIONS	LOAD TYPE[a]	MAXIMUM LOAD[b]	NO. OF RESTRAINTS MISSING / INOPERABLE			
					1 FWD	2 FWD[c]	1 AFT	2 AFT[c]
H	678.3 to 981.4	5	1	7937	7937	7937	7937	7937
			2	15875	9806	9085	15875	15875
			3	7574	7574	7574	7574	7574
			4	15875	9806	9085	15875	15875
			5	14288	8046	8046	13276	13276
I	738.9 to 981.4	4	1	6350	6350	6350	6350	6350
			2	12700	9806	9085	12700	12700
			3	5987	5987	5987	5987	5987
			4	12700	9806	9085	12700	12700
			5	11113	8046	8046	11113	11113
J	799.5 to 981.4	3	1	4762	4005	4005	4762	4762
			2	9525	4880	4522	9525	9525
			3	4399	4005	4005	4399	4399
			4	9525	4880	4522	9525	9525
			5	7937	4005	4005	7937	7937
K	860.1 to 981.4	2	1	3175	3175	3175	3175	3175
			2	6350	4880	4522	6350	6350
			5	4762	4005	4005	4762	4762
L	920.1 to 981.4	1	1	1587	1587	1587	1587	1587
			2	3175	3175	3175	3175	3175
M	530.0 to 590.7	1	1	1587	1587	1587	1587	1587
			2	3175	3175	3175	3175	3175
N	469.4 to 590.7	2	1	3175	3175	3175	3175	3175
			2	6350	6350	6350	5805	5379
			5	4762	4762	4762	4762	4762
O	408.8 to 590.7	3	1	4762	4005	4005	4762	4762
			2	9525	4880	4522	5805	5379
			3	4399	4005	4005	4399	4399
			4	9525	4880	4522	5805	5379
			5	7937	4005	4005	4762	4762

[a] The load types are defined as follows:
1. Size Code K (load per side).
2. Size Code L.
3. Size Code K intermixed with Size Code P (load per side). Size Code K are located at both ends of a string.
4. Size Code L intermixed with Size Code K. Size Code L are located at both ends of a string.
5. Size Code L intermixed with Size Code K. Size Code K is located at one end of a string.

[b] All restraints are operational.
[c] Only one restraint may be missing from each side. Missing / inoperative restraints must not be adjacent to each other.

APPLICABLE CONFIGURATIONS
A, B, C, E, F

BOEING PROPRIETARY
Export Controlled by ECCN 9E991

FORWARD COMPARTMENT UNIT LOAD DEVICE LOAD LIMITS (Continued)

Side Restraint Only - Size Codes K, L, & P Containers

The following table shows the maximum allowable unit load device weights with missing or inoperative side restraints. The data presented is independent of the type of restraint hardware.

MAXIMUM ALLOWABLE LOAD WITH MISSING / INOPERATIVE RESTRAINTS SIDE RESTRAINTS ONLY - SIZE CODES K, L, & P							
NUMBER OF OPERATIVE RESTRAINTS	ZONE	UNIT LOAD DEVICE SIZE CODE					
		K		L		P	
		LB	KG	LB	KG	LB	KG
3	All except B	3500	1587	7000	3175	2700	1224
	B						
2	All except B	3500	1587	5620	2549	2700	1224
	B	3500	1587	7000	3175		
1	All except B	2810	1274	2810	1274	2700	1224
	B	3500	1587	7000	3175		

Side Restraint Only - Size Codes K & L Pallets

The following table shows the maximum allowable unit load device weights in pounds with missing or inoperative side restraints. The data presented is independent of the type of restraint hardware.

MAXIMUM ALLOWABLE LOAD WITH MISSING / INOPERATIVE RESTRAINTS SIDE RESTRAINTS ONLY - SIZE CODES K & L PALLETS - LB													
SIZE CODE	NUMBER OF OPERATIVE RESTRAINTS	PALLET POSITION											
		11	12	13	14	21	22	23	24	25	26	27	28
K	3	3500		3500	3500	3500	3500				3500	3500	3500
	2	3500	3500	3500	3500	3500	3500	3500	3500	3500	3500	3500	3500
	1	0	0	0	0	0	0	0	0	0	0	0	0
L	3	7000		6870	6830	7000	7000				7000	7000	7000
	2	5620	5920	5620	5620	5620	5620	5620	5400	5400	5620	5620	5620
	1	0	0	0	0	0	0	0	0	0	0	0	0

APPLICABLE CONFIGURATIONS
A, B, C, E, F

BOEING PROPRIETARY
Export Controlled by ECCN 9E991

FORWARD COMPARTMENT UNIT LOAD DEVICE LOAD LIMITS (Continued)

The following table shows the maximum allowable unit load device weights in kilograms with missing or inoperative side restraints. The data presented is independent of the type of restraint hardware.

MAXIMUM ALLOWABLE LOAD WITH MISSING / INOPERATIVE RESTRAINTS SIDE RESTRAINTS ONLY - SIZE CODES K & L PALLETS - KG													
SIZE CODE	NUMBER OF OPERATIVE RESTRAINTS	PALLET POSITION											
		11	12	13	14	21	22	23	24	25	26	27	28
K	3	1587		1587	1587	1587	1587				1587	1587	1587
	2	1587	1587	1587	1587	1587	1587	1587	1587	1587	1587	1587	1587
	1	0	0	0	0	0	0	0	0	0	0	0	0
L	3	3175		3116	3098	3175	3175				3175	3175	3175
	2	2549	2685	2549	2549	2549	2549	2549	2449	2449	2549	2549	2549
	1	0	0	0	0	0	0	0	0	0	0	0	0

Vertical Restraint Only - Size Codes K, L, & P Containers

The following table shows the maximum allowable unit load device weights with missing or inoperative vertical restraints:

MAXIMUM ALLOWABLE LOAD WITH MISSING / INOPERATIVE RESTRAINTS VERTICAL RESTRAINTS ONLY - SIZE CODES K, L, & P							
NUMBER OF OPERATIVE RESTRAINTS	ZONE	UNIT LOAD DEVICE SIZE CODE					
		K		L		P	
		LB	KG	LB	KG	LB	KG
6	All except B	3500	1587	7000	3175		
	B						
5	All except B	3500	1587	7000	3175		
	B						
4	All except B	3500	1587	7000	3175		
	B[a]	3500	1587	7000	3175		
3	All except B	3500	1587	5250	2381	2700	1224
	B[a]	3500	1587	6180	2803		
2	All except B	3480	1578	3500	1587	2700	1224
	B[a]	3090	1401	4430	2009		
1	All except B	0	0	0	0	0	0
	B[a]	0	0	0	0		

[a] Lateral guide vertical restraint flippers are not counted as restraints for Size Codes K, L, or P containers.

APPLICABLE CONFIGURATIONS
A, B, C, E, F

BOEING PROPRIETARY
Export Controlled by ECCN 9E991

FORWARD COMPARTMENT UNIT LOAD DEVICE LOAD LIMITS (Continued)

Vertical Restraint Only - Size Codes K & L Pallets

The following table shows the maximum allowable unit load device weights in pounds with missing or inoperative vertical restraints:

MAXIMUM ALLOWABLE LOAD WITH MISSING / INOPERATIVE RESTRAINTS VERTICAL RESTRAINTS ONLY - SIZE CODES K & L PALLETS - LB													
SIZE CODE	NUMBER OF OPERATIVE RESTRAINTS	PALLET POSITION											
		11	12	13	14	21	22	23	24	25	26	27	28
K	4-6	3500	3500	3500	3500	3500	3500	3500	3500	3500	3500	3500	3500
	3	3500	3500	3130	3500	3500	3500	3500	3500	3500	3500	3500	3500
	2	3440	3500	2080	3440	3440	3440	3440	3440	3440	3440	3440	3440
	1	0	0	0	0	0	0	0	0	0	0	0	0
L	6	7000		6870	6830	7000	7000				7000	7000	7000
	5	7000		5720	5690	7000	7000				7000	7000	7000
	4	7000	5920	4580	4550	7000	7000	5620	5400	5400	7000	7000	7000
	3	5250	4440	3430	3410	5250	5250	5050	4050	4050	5250	5250	5250
	2	3500	2960	2290	2270	3500	3500	3360	2700	2700	3500	3500	3500
	1	0	0	0	0	0	0	0	0	0	0	0	0

The following table shows the maximum allowable unit load device weights in kilograms with missing or inoperative vertical restraints:

MAXIMUM ALLOWABLE LOAD WITH MISSING / INOPERATIVE RESTRAINTS VERTICAL RESTRAINTS ONLY - SIZE CODES K & L PALLETS - KG													
SIZE CODE	NUMBER OF OPERATIVE RESTRAINTS	PALLET POSITION											
		11	12	13	14	21	22	23	24	25	26	27	28
K	4-6	1587	1587	1587	1587	1587	1587	1587	1587	1587	1587	1587	1587
	3	1587	1587	1419	1587	1587	1587	1587	1587	1587	1587	1587	1587
	2	1560	1587	943	1560	1560	1560	1560	1560	1560	1560	1560	1560
	1	0	0	0	0	0	0	0	0	0	0	0	0
L	6	3175		3116	3098	3175	3175				3175	3175	3175
	5	3175		2594	2580	3175	3175				3175	3175	3175
	4	3175	2685	2077	2063	3175	3175	2549	2449	2449	3175	3175	3175
	3	2381	2013	1555	1546	2381	2381	2290	1837	1837	2381	2381	2381
	2	1587	1342	1038	1029	1587	1587	1524	1224	1224	1587	1587	1587
	1	0	0	0	0	0	0	0	0	0	0	0	0

APPLICABLE CONFIGURATIONS
A, B, C, E, F

BOEING PROPRIETARY
Export Controlled by ECCN 9E991

FORWARD COMPARTMENT UNIT LOAD DEVICE LOAD LIMITS

CARGO RESTRAINT SYSTEM - SIZE CODES K, L, & P

The longitudinal area between each combination of fwd / aft restraints is referred to as a zone. All zones in a cargo compartment are unique, and all restraints within the boundaries of a zone are either down or inoperable. The illustration below identifies the locations of the stops / locks / guides and the associated zones for Size Codes K, L, & P.

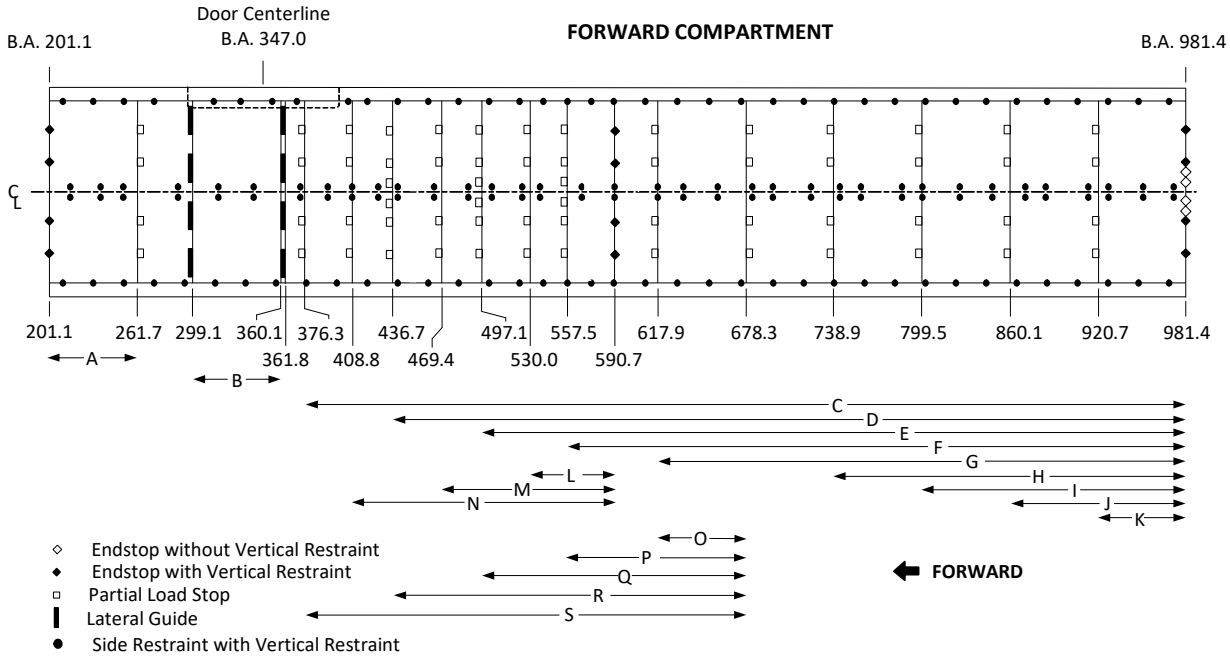

Unit Load Device Intermixing

Size Codes K, L, & P ULDs can be intermixed in the cargo compartments, provided that:

- Pallet profile less than LD3-45 must not occupy the first or last position of the string, not allowing other ULDs to overcome the pallet during a forward or aft shift.
- Code size P must not occupy the first, last or doorway position of the string.
- LD-2 containers are paired with another LD-2 or LD-3 container within a string.
- Intermixing of non-certified ULDs must engage the cargo restraint system similar to a certified pallet, and have sufficient strength and rigidity to maintain that engagement under load.
- Non-certified ULDs are greater than 63 inches in height.

If a fwd / aft restraint is broken or inoperative, ULDs can still be intermixed provided:

- The allowable zonal load per the missing restraint section is not exceeded.
- Do not place a pair of LD-2 containers (side by side) against inoperative restraints when intermixing ULDs.

Size Codes K, L & P ULDs can be intermixed in Zone N, provided that one Size Code L, or two Size Code K containers are located against the aft restraints. One Size Code K may be loaded against the aft restraints if the other side of Zone N is empty.

APPLICABLE CONFIGURATIONS
D

BOEING PROPRIETARY
Export Controlled by ECCN 9E991

FORWARD COMPARTMENT UNIT LOAD DEVICE LOAD LIMITS (Continued)

LOAD LIMITS - SIZE CODES K, L, & P

The remaining sections of this subject describe loading considerations, restraint systems, missing or inoperable restraints, and provide maximum allowable loads for each restraint direction under various operational conditions.

Loading Considerations

The allowable weight for each zone is a function of the type of ULD that comes in contact with the forward and aft restraints, the load factors, and by the restraint and ULD capabilities.

CAUTION ENSURE THERE IS SUFFICIENT CLEARANCE BETWEEN THE TOP OF THE CARGO AND THE CARGO BAY CEILING WHILE LOADING AND UNLOADING CARGO. DAMAGE TO THE AIRPLANE CAN OCCUR IF THERE IS NOT SUFFICIENT VERTICAL CLEARANCE.

NOTE Airplanes with the -300ER nose landing gear move differently during loading and unloading than other 777 model airplanes.

Unless otherwise stated, the following guidelines must be followed to determine allowable loads in a zone.

- The operator determines the number of restraints available for each zone.
- The allowable zone weight includes ULD tare. Any load in excess of the allowables specified herein must be restrained by additional tiedowns (refer to CHP-SEC 1-68-00x for tiedown information).
- Allowable weights may further be restricted by limitations in this manual.
- Restraints at the fwd and aft end of a string of containers may be missing at the same time. However, the most limiting allowable zonal load for a missing fwd or aft restraint must be used.
- Missing / inoperative restraints in the same direction cannot be adjacent (i.e. two adjacent side restraints or two adjacent vertical restraints at the forward or aft side of the ULD may not be missing or inoperative). Also, two restraints adjacent to a common corner cannot be missing / inoperable. If this condition exists, the allowable weight of the associated zone is 0 LB (0 KG).
- LD-2 containers must be paired with another LD-2 or LD-3 container.
- LD-2 containers must be loaded in a string and must not occupy the first, last or doorway positions.
- A pair of LD-2's or paired LD-2 and LD-3 containers loaded in a unstrung zone, must be tied down.
- To reduce inadvertent cargo movement, it is recommended that all available restraints, including lateral guides, in unoccupied positions be raised.
- A maximum of two missing or inoperative restraints (one on the left side and one on the right side of the airplane) are allowed in each restraint direction.

APPLICABLE CONFIGURATIONS
D

BOEING PROPRIETARY
Export Controlled by ECCN 9E991

FORWARD COMPARTMENT UNIT LOAD DEVICE LOAD LIMITS (Continued)

- For any ULD, restraints used to react the load in the inboard / outboard directions may not be missing / inoperative if restraints in the fwd / aft directions are also missing / inoperative. If this condition exists, tiedowns are required.
- Pallet position P22 cannot be tied down when a single Size Code K ULD is loaded in the position immediately forward of pallet position P22.

Missing / Inoperative Restraints

Maximum loads for unit load devices shown in this section assume all equipment is installed and operable. When equipment is missing or inoperable, allowable loading may be reduced. Certain instances of missing or inoperable equipment reduce the allowable loading to zero.

CAUTION CARE MUST BE EXERCISED DURING LOADING AND UNLOADING OF UNIT LOAD DEVICES WHEN EQUIPMENT IS MISSING / INOPERATIVE TO PREVENT DAMAGE TO AIRPLANE STRUCTURE. IT IS ADVISABLE THAT MALFUNCTIONING EQUIPMENT BE REPAIRED OR REPLACED TO PREVENT DAMAGE TO OPERATIVE EQUIPMENT.

The following equipment malfunctions do not constitute a load limit restriction:

- Jammed or missing sill rollers without vertical restraint
- Jammed or missing balls in a ball mat
- Jammed or missing rollers in a roller unit
- Split Side Guide rail

Restraint systems fall into three categories: side restraints, side/vertical restraints and forward/aft restraints. Each restraint direction is considered separately when missing / inoperative restraint equipment exists (i.e. forward, aft, side left, side right and vertical loading). When a missing or inoperative restraint condition exists, the allowable weight is determined by considering each restraint direction separately and using the most limiting resultant allowable weight.

Missing / inoperative restraints must not be adjacent to each other.

NOTE An empty ULD can be carried in any position provided at least one restraint is operable in each forward, aft, side left and side right direction. In addition, ULDs less than 63 inches in height require one vertical restraint on each edge (forward, aft, side left and side right) to be operable.

BOEING PROPRIETARY
Export Controlled by ECCN 9E991

FORWARD COMPARTMENT UNIT LOAD DEVICE LOAD LIMITS (Continued)

Forward and Aft Restraints (Pounds) - Size Codes K, L, & P

The following table shows the maximum allowable zone weights, in pounds, with missing or inoperative forward / aft restraints:

MAXIMUM ALLOWABLE LOADS WITH MISSING / INOPERATIVE RESTRAINTS SIZE CODES K, L, & P - LB								
ZONE	B.A. IN.	NO. OF POSITIONS	LOAD TYPE[a]	MAXIMUM LOAD[b]	NO. OF RESTRAINTS MISSING / INOPERABLE			
					1 FWD	2 FWD[c]	1 AFT	2 AFT[c]
A	201.1 to 261.7	1	1	3500	3500	3500	3500	3500
			2	7000	7000	7000	7000	7000
B	299.1 to 360.1	1	1	3500	3500	3500	3500	3500
			2	7000	7000	7000	7000	6635
C	376.3 to 981.4	10	1	35000	29270	29270	29270	29270
			2	70000	35670	33060	70000	51890
			3	34200	29270	29270	29270	29270
			4	70000	35670	33060	70000	51890
			5	66500	29270	29270	29270	29270
D	436.7 to 981.4	9	1	31500	26330	26330	29270	29270
			2	63000	46680	35770	63000	51890
			3	30700	26330	26330	29270	29270
			4	63000	46680	35770	63000	51890
			5	59500	26330	26330	29270	29270
E	497.1 to 981.4	8	1	28000	26330	26330	28000	28000
			2	56000	46680	35770	56000	51890
			3	27200	26330	26330	27200	27200
			4	56000	46680	35770	56000	51890
			5	52500	26330	26330	29270	29270
F	557.5 to 981.4	7	1	24500	17740	17740	24500	24500
			2	49000	30730	23550	49000	49000
			3	23700	17740	17740	23700	23700
			4	49000	30730	23550	49000	49000
			5	45500	17740	17740	29270	29270
G	617.9 to 981.4	6	1	21000	17740	17740	21000	21000
			2	42000	21620	20030	42000	42000
			3	20200	17740	17740	20200	20200
			4	42000	21620	20030	42000	42000
			5	38500	17740	17740	29270	29270
H	738.9 to 981.4	4	1	14000	14000	14000	14000	14000
			2	28000	21620	20030	28000	28000
			3	13200	13200	13200	13200	13200
			4	28000	21620	20030	28000	28000
			5	24500	17740	17740	24500	24500

APPLICABLE CONFIGURATIONS
D

BOEING PROPRIETARY
Export Controlled by ECCN 9E991

FORWARD COMPARTMENT UNIT LOAD DEVICE LOAD LIMITS (Continued)

MAXIMUM ALLOWABLE LOADS WITH MISSING / INOPERATIVE RESTRAINTS SIZE CODES K, L, & P - LB (Continued)								
ZONE	B.A. IN.	NO. OF POSITIONS	LOAD TYPE[a]	MAXIMUM LOAD[b]	NO. OF RESTRAINTS MISSING / INOPERABLE			
					1 FWD	2 FWD[c]	1 AFT	2 AFT[c]
I	799.5 to 981.4	3	1	10500	8830	8830	10500	10500
			2	21000	10760	9970	21000	21000
			3	9700	8830	8830	9700	9700
			4	21000	10760	9970	21000	21000
			5	17500	8830	8830	17500	17500
J	860.1 to 981.4	2	1	7000	7000	7000	7000	7000
			2	14000	10760	9970	14000	14000
			5	10500	8830	8830	10500	10500
K	920.1 to 981.4	1	1	3500	3500	3500	3500	3500
			2	7000	7000	7000	7000	7000
L	530.0 to 590.7	1	1	3500	3500	3500	3500	3500
			2	7000	7000	7000	7000	7000
M	469.4 to 590.7	2	1	7000	7000	7000	7000	7000
			2	14000	14000	14000	12800	11860
			5	10500	10500	10500	10500	10500
N	408.8 to 590.7	3	1	10500	8830	8830	10500	10500
			2	21000	10760	9970	12800	11860
			3	9700	8830	8830	9700	9700
			4	21000	10760	9970	12800	11860
			5	17500	8830	8830	10500	10500
O	617.9 to 678.3	1	1	3500	3500	3500	3500	3500
			2	7000	7000	7000	7000	7000
P	557.5 to 678.3	2	1	7000	7000	7000	7000	7000
			2	14000	14000	14000	14000	14000
			5	10500	10500	10500	10500	10500
Q	497.1 to 678.3	3	1	10500	10500	10500	10500	10500
			2	21000	21000	21000	16100	14920
			3	9700	9700	9700	9700	9700
			4	21000	21000	21000	16100	14920
			5	12640	12640	12640	12640	12640
R	436.7 to 678.3	4	1	14000	14000	14000	12640	12640
			2	28000	28000	28000	16100	14920
			3	13200	13200	13200	12640	12640
			4	28000	28000	28000	16100	14920
			5	12640	12640	12640	12640	12640

APPLICABLE CONFIGURATIONS
D

BOEING PROPRIETARY
Export Controlled by ECCN 9E991

FORWARD COMPARTMENT UNIT LOAD DEVICE LOAD LIMITS (Continued)

MAXIMUM ALLOWABLE LOADS WITH MISSING / INOPERATIVE RESTRAINTS SIZE CODES K, L, & P - LB (Continued)								
ZONE	B.A. IN.	NO. OF POSITIONS	LOAD TYPE[a]	MAXIMUM LOAD[b]	NO. OF RESTRAINTS MISSING / INOPERABLE			
					1 FWD	2 FWD[c]	1 AFT	2 AFT[c]
S	376.3 to 678.3	5	1	17500	17500	17500	12640	12640
			2	35000	35000	33060	16100	14920
			3	16700	16700	16700	12640	12640
			4	35000	35000	33060	16100	14920
			5	12640	12640	12640	12640	12640

[a] The load types are defined as follows:
1. Size Code K (load per side).
2. Size Code L or Size Code L intermixed with Size Code K. Size Code K loaded in pairs.
3. Size Code K intermixed with Size Code P (load per side). Size Code K are located at both ends of a string.
4. Size Code L intermixed with Size Code K. Size Code L are located at both ends of a string.
5. Size Code L intermixed with Size Code K. Size Code K is located at one end of a string.

[b] All restraints are operational.

[c] Only one restraint may be missing from each side. Missing / inoperative restraints must not be adjacent to each other.

APPLICABLE CONFIGURATIONS
D

BOEING PROPRIETARY
Export Controlled by ECCN 9E991

FORWARD COMPARTMENT UNIT LOAD DEVICE LOAD LIMITS (Continued)

Forward and Aft Restraints (Kilograms) - Size Codes K, L, & P

The following table shows the maximum allowable zone weights, in kilograms, with missing or inoperative forward / aft restraints:

MAXIMUM ALLOWABLE LOADS WITH MISSING / INOPERATIVE RESTRAINTS SIZE CODES K, L, & P - KG								
ZONE	B.A. IN.	NO. OF POSITIONS	LOAD TYPE[a]	MAXIMUM LOAD[b]	NO. OF RESTRAINTS MISSING / INOPERABLE			
					1 FWD	2 FWD[c]	1 AFT	2 AFT[c]
A	201.1 to 261.7	1	1	1587	1587	1587	1587	1587
			2	3175	3175	3175	3175	3175
B	299.1 to 360.1	1	1	1587	1587	1587	1587	1587
			2	3175	3175	3175	3175	3009
C	376.3 to 981.4	10	1	15875	13276	13276	13276	13276
			2	31751	16179	14995	31751	23536
			3	15512	13276	13276	13276	13276
			4	31751	16179	14995	31751	23536
			5	30163	13276	13276	13276	13276
D	436.7 to 981.4	9	1	14288	11943	11943	13276	13276
			2	28576	21173	16224	28576	23536
			3	13925	11943	11943	13276	13276
			4	28576	21173	16224	28576	23536
			5	26988	11943	11943	13276	13276
E	497.1 to 981.4	8	1	12700	11943	11943	12700	12700
			2	25401	21173	16224	25401	23536
			3	12337	11943	11943	12337	12337
			4	25401	21173	16224	25401	23536
			5	23813	11943	11943	13276	13276
F	557.5 to 981.4	7	1	11113	8046	8046	11113	11113
			2	22226	13938	10682	22226	22226
			3	10750	8046	8046	10750	10750
			4	22226	13938	10682	22226	22226
			5	20638	8046	8046	13276	13276
G	617.9 to 981.4	6	1	9525	8046	8046	9525	9525
			2	19050	9806	9085	19050	19050
			3	9162	8046	8046	9162	9162
			4	19050	9806	9085	19050	19050
			5	17463	8046	8046	13276	13276
H	738.9 to 981.4	4	1	6350	6350	6350	6350	6350
			2	12700	9806	9085	12700	12700
			3	5987	5987	5987	5987	5987
			4	12700	9806	9085	12700	12700
			5	11113	8046	8046	11113	11113

APPLICABLE CONFIGURATIONS
D

BOEING PROPRIETARY
Export Controlled by ECCN 9E991

FORWARD COMPARTMENT UNIT LOAD DEVICE LOAD LIMITS (Continued)

MAXIMUM ALLOWABLE LOADS WITH MISSING / INOPERATIVE RESTRAINTS SIZE CODES K, L, & P - KG (Continued)								
ZONE	B.A. IN.	NO. OF POSITIONS	LOAD TYPE[a]	MAXIMUM LOAD[b]	NO. OF RESTRAINTS MISSING / INOPERABLE			
					1 FWD	2 FWD[c]	1 AFT	2 AFT[c]
I	799.5 to 981.4	3	1	4762	4005	4005	4762	4762
			2	9525	4880	4522	9525	9525
			3	4399	4005	4005	4399	4399
			4	9525	4880	4522	9525	9525
			5	7937	4005	4005	7937	7937
J	860.1 to 981.4	2	1	3175	3175	3175	3175	3175
			2	6350	4880	4522	6350	6350
			5	4762	4005	4005	4762	4762
K	920.1 to 981.4	1	1	1587	1587	1587	1587	1587
			2	3175	3175	3175	3175	3175
L	530.0 to 590.7	1	1	1587	1587	1587	1587	1587
			2	3175	3175	3175	3175	3175
M	469.4 to 590.7	2	1	3175	3175	3175	3175	3175
			2	6350	6350	6350	5805	5379
			5	4762	4762	4762	4762	4762
N	408.8 to 590.7	3	1	4762	4005	4005	4762	4762
			2	9525	4880	4522	5805	5379
			3	4399	4005	4005	4399	4399
			4	9525	4880	4522	5805	5379
			5	7937	4005	4005	4762	4762
O	617.9 to 678.3	1	1	1587	1587	1587	1587	1587
			2	3175	3175	3175	3175	3175
P	557.5 to 678.3	2	1	3175	3175	3175	3175	3175
			2	6350	6350	6350	6350	6350
			5	4762	4762	4762	4762	4762
Q	497.1 to 678.3	3	1	4762	4762	4762	4762	4762
			2	9525	9525	9525	7302	6767
			3	4399	4399	4399	4399	4399
			4	9525	9525	9525	7302	6767
			5	5733	5733	5733	5733	5733
R	436.7 to 678.3	4	1	6350	6350	6350	5733	5733
			2	12700	12700	12700	7302	6767
			3	5987	5987	5987	5733	5733
			4	12700	12700	12700	7302	6767
			5	5733	5733	5733	5733	5733

APPLICABLE CONFIGURATIONS
D

BOEING PROPRIETARY
Export Controlled by ECCN 9E991

FORWARD COMPARTMENT UNIT LOAD DEVICE LOAD LIMITS (Continued)

MAXIMUM ALLOWABLE LOADS WITH MISSING / INOPERATIVE RESTRAINTS SIZE CODES K, L, & P - KG (Continued)								
ZONE	B.A. IN.	NO. OF POSITIONS	LOAD TYPE[a]	MAXIMUM LOAD[b]	NO. OF RESTRAINTS MISSING / INOPERABLE			
					1 FWD	2 FWD[c]	1 AFT	2 AFT[c]
S	376.3 to 678.3	5	1	7937	7937	7937	5733	5733
			2	15875	15875	14995	7302	6767
			3	7574	7574	7574	5733	5733
			4	15875	15875	14995	7302	6767
			5	5733	5733	5733	5733	5733

[a] The load types are defined as follows:
1. Size Code K (load per side).
2. Size Code L or Size Code L intermixed with Size Code K. Size Code K loaded in pairs.
3. Size Code K intermixed with Size Code P (load per side). Size Code K are located at both ends of a string.
4. Size Code L intermixed with Size Code K. Size Code L are located at both ends of a string.
5. Size Code L intermixed with Size Code K. Size Code K is located at one end of a string.

[b] All restraints are operational.
[c] Only one restraint may be missing from each side. Missing / inoperative restraints must not be adjacent to each other.

BOEING PROPRIETARY
Export Controlled by ECCN 9E991

FORWARD COMPARTMENT UNIT LOAD DEVICE LOAD LIMITS (Continued)

Side Restraint Only - Size Codes K, L, & P Containers

The following table shows the maximum allowable unit load device weights with missing or inoperative side restraints. The data presented is independent of the type of restraint hardware.

MAXIMUM ALLOWABLE LOAD WITH MISSING / INOPERATIVE RESTRAINTS SIDE RESTRAINTS ONLY - SIZE CODES K, L, & P							
NUMBER OF OPERATIVE RESTRAINTS	ZONE	UNIT LOAD DEVICE SIZE CODE					
		K		L		P	
		LB	KG	LB	KG	LB	KG
3	All except B	3500	1587	7000	3175	2700	1224
	B						
2	All except B	3500	1587	5620	2549	2700	1224
	B	3500	1587	7000	3175		
1	All except B	2810	1274	2810	1274	2700	1224
	B	3500	1587	7000	3175		

Side Restraint Only - Size Codes K & L Pallets

The following table shows the maximum allowable unit load device weights in pounds with missing or inoperative side restraints. The data presented is independent of the type of restraint hardware.

MAXIMUM ALLOWABLE LOAD WITH MISSING / INOPERATIVE RESTRAINTS SIDE RESTRAINTS ONLY - SIZE CODES K & L PALLETS - LB													
SIZE CODE	NUMBER OF OPERATIVE RESTRAINTS	PALLET POSITION											
		11	12	13	14	21	22	23	24	25	26	27	28
K	3	3500		3500	3500	3500	3500				3500	3500	3500
	2	3500	3500	3500	3500	3500	3500	3500	3500	3500	3500	3500	3500
	1	0	0	0	0	0	0	0	0	0	0	0	0
L	3	7000		6870	6830	7000	7000				7000	7000	7000
	2	5620	5920	5620	5620	5620	5620	5620	5400	5400	5620	5620	5620
	1	0	0	0	0	0	0	0	0	0	0	0	0

APPLICABLE CONFIGURATIONS
D

BOEING PROPRIETARY
Export Controlled by ECCN 9E991

FORWARD COMPARTMENT UNIT LOAD DEVICE LOAD LIMITS (Continued)

The following table shows the maximum allowable unit load device weights in kilograms with missing or inoperative side restraints. The data presented is independent of the type of restraint hardware.

MAXIMUM ALLOWABLE LOAD WITH MISSING / INOPERATIVE RESTRAINTS SIDE RESTRAINTS ONLY - SIZE CODES K & L PALLETS - KG													
SIZE CODE	NUMBER OF OPERATIVE RESTRAINTS	PALLET POSITION											
		11	12	13	14	21	22	23	24	25	26	27	28
K	3	1587		1587	1587	1587	1587				1587	1587	1587
	2	1587	1587	1587	1587	1587	1587	1587	1587	1587	1587	1587	1587
	1	0	0	0	0	0	0	0	0	0	0	0	0
L	3	3175		3116	3098	3175	3175				3175	3175	3175
	2	2549	2685	2549	2549	2549	2549	2549	2449	2449	2549	2549	2549
	1	0	0	0	0	0	0	0	0	0	0	0	0

Vertical Restraint Only - Size Codes K, L, & P Containers

The following table shows the maximum allowable unit load device weights with missing or inoperative vertical restraints:

MAXIMUM ALLOWABLE LOAD WITH MISSING / INOPERATIVE RESTRAINTS VERTICAL RESTRAINTS ONLY - SIZE CODES K, L, & P							
NUMBER OF OPERATIVE RESTRAINTS	ZONE	UNIT LOAD DEVICE SIZE CODE					
		K		L		P	
		LB	KG	LB	KG	LB	KG
6	All except B	3500	1587	7000	3175		
	B						
5	All except B	3500	1587	7000	3175		
	B						
4	All except B	3500	1587	7000	3175		
	B[a]	3500	1587	7000	3175		
3	All except B	3500	1587	5250	2381	2700	1224
	B[a]	3500	1587	6180	2803		
2	All except B	3480	1578	3500	1587	2700	1224
	B[a]	3090	1401	4430	2009		
1	All except B	0	0	0	0	0	0
	B[a]	0	0	0	0		

[a] Lateral guide vertical restraint flippers are not counted as restraints for Size Codes K, L, or P containers.

APPLICABLE CONFIGURATIONS
D

BOEING PROPRIETARY
Export Controlled by ECCN 9E991

FORWARD COMPARTMENT UNIT LOAD DEVICE LOAD LIMITS (Continued)

Vertical Restraint Only - Size Codes K & L Pallets

The following table shows the maximum allowable unit load device weights in pounds with missing or inoperative vertical restraints:

MAXIMUM ALLOWABLE LOAD WITH MISSING / INOPERATIVE RESTRAINTS VERTICAL RESTRAINTS ONLY - SIZE CODES K & L PALLETS - LB													
SIZE CODE	NUMBER OF OPERATIVE RESTRAINTS	PALLET POSITION											
		11	12	13	14	21	22	23	24	25	26	27	28
K	4-6	3500	3500	3500	3500	3500	3500	3500	3500	3500	3500	3500	3500
	3	3500	3500	3130	3500	3500	3500	3500	3500	3500	3500	3500	3500
	2	3440	3500	2080	3440	3440	3440	3440	3440	3440	3440	3440	3440
	1	0	0	0	0	0	0	0	0	0	0	0	0
L	6	7000		6870	6830	7000	7000				7000	7000	7000
	5	7000		5720	5690	7000	7000				7000	7000	7000
	4	7000	5920	4580	4550	7000	7000	5620	5400	5400	7000	7000	7000
	3	5250	4440	3430	3410	5250	5250	5050	4050	4050	5250	5250	5250
	2	3500	2960	2290	2270	3500	3500	3360	2700	2700	3500	3500	3500
	1	0	0	0	0	0	0	0	0	0	0	0	0

The following table shows the maximum allowable unit load device weights in kilograms with missing or inoperative vertical restraints:

MAXIMUM ALLOWABLE LOAD WITH MISSING / INOPERATIVE RESTRAINTS VERTICAL RESTRAINTS ONLY - SIZE CODES K & L PALLETS - KG													
SIZE CODE	NUMBER OF OPERATIVE RESTRAINTS	PALLET POSITION											
		11	12	13	14	21	22	23	24	25	26	27	28
K	4-6	1587	1587	1587	1587	1587	1587	1587	1587	1587	1587	1587	1587
	3	1587	1587	1419	1587	1587	1587	1587	1587	1587	1587	1587	1587
	2	1560	1587	943	1560	1560	1560	1560	1560	1560	1560	1560	1560
	1	0	0	0	0	0	0	0	0	0	0	0	0
L	6	3175		3116	3098	3175	3175				3175	3175	3175
	5	3175		2594	2580	3175	3175				3175	3175	3175
	4	3175	2685	2077	2063	3175	3175	2549	2449	2449	3175	3175	3175
	3	2381	2013	1555	1546	2381	2381	2290	1837	1837	2381	2381	2381
	2	1587	1342	1038	1029	1587	1587	1524	1224	1224	1587	1587	1587
	1	0	0	0	0	0	0	0	0	0	0	0	0

APPLICABLE CONFIGURATIONS
D

BOEING PROPRIETARY
Export Controlled by ECCN 9E991

FORWARD COMPARTMENT UNIT LOAD DEVICE LOAD LIMITS

CARGO RESTRAINT SYSTEM - SIZE CODES A, M, N, & Q LONGITUDINAL

The longitudinal area between each combination of fwd / aft restraints is referred to as a zone. All zones in a cargo compartment are unique, and all restraints within the boundaries of a zone are either down or inoperable. The illustration below identifies the locations of the stops / locks / guides and the associated zones for Size Codes A, M, N, & Q Longitudinal.

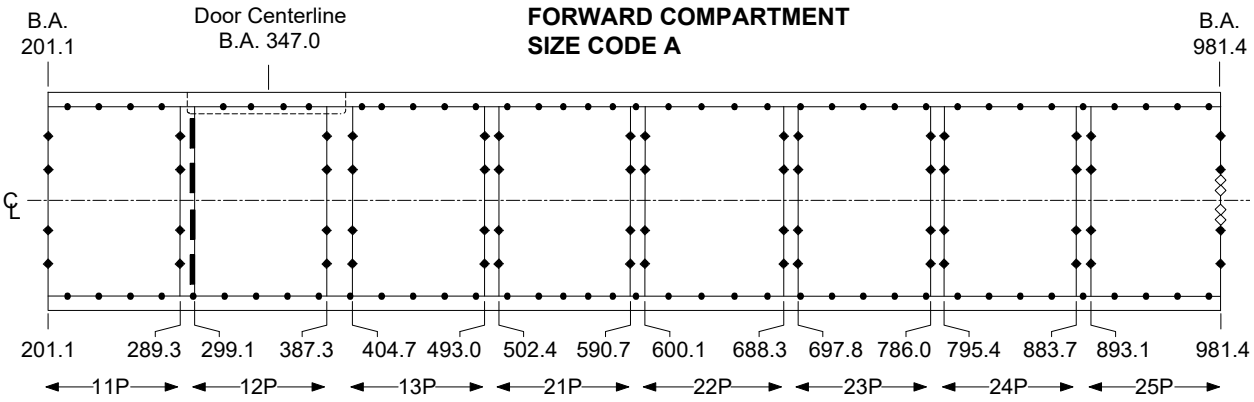

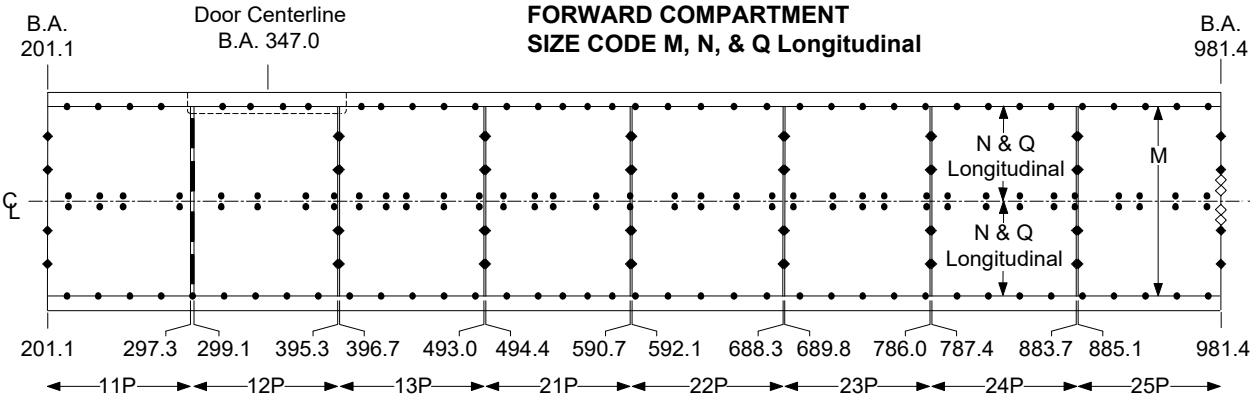

- ◇ Endstop without Vertical Restraint
- ◆ Endstop with Vertical Restraint
- ● Side Restraint/Vertical Restraint
- ▌ Lateral Guide with Vertical Restraint

FORWARD

APPLICABLE CONFIGURATIONS
All

BOEING PROPRIETARY
Export Controlled by ECCN 9E991

FORWARD COMPARTMENT UNIT LOAD DEVICE LOAD LIMITS (Continued)

LOAD LIMITS - SIZE CODES A, M, N, & Q LONGITUDINAL

The remaining sections of this subject describe loading considerations, restraint systems, missing or inoperable restraints, and provide maximum allowable loads for each restraint direction under various operational conditions.

Loading Considerations

The allowable weight for each zone is a function of the restraint capabilities, the load factors, and the ULD capabilities.

CAUTION ENSURE THERE IS SUFFICIENT CLEARANCE BETWEEN THE TOP OF THE CARGO AND THE CARGO BAY CEILING WHILE LOADING AND UNLOADING CARGO. DAMAGE TO THE AIRPLANE CAN OCCUR IF THERE IS NOT SUFFICIENT VERTICAL CLEARANCE.

NOTE Airplanes with the -300ER nose landing gear move differently during loading and unloading than other 777 model airplanes.

Unless otherwise stated, the following guidelines must be followed to determine allowable loads in a zone.

- The operator determines the number of restraints available for each zone.
- The allowable zone weight includes ULD tare. Any load in excess of the allowables specified herein must be restrained by additional tiedowns (refer to CHP-SEC 1-68-00x for tiedown information).
- Allowable weights may further be restricted by limitations in this manual.
- Missing / inoperative restraints in the same direction cannot be adjacent (i.e. two adjacent side restraints or two adjacent vertical restraints may not be missing or inoperative). Also, two restraints adjacent to a common corner cannot be missing / inoperable. If this condition exists, the allowable weight of the associated zone is 0 LB (0 KG).
- Size Code Q ULDs loaded longitudinally must be a minimum of 63 inches in height (per AS1677) and may have any number of vertical restraints on the side guides or center guides missing without a load limit restriction. Those less than 63 inches must be vertically restrained by tiedowns as specified in CHP-SEC 1-68-00x.
- All ULDs, except Size Code Q, must be restrained vertically along all four sides.
- A missing / inoperative side guide rail is equivalent to the loss of a side restraint.
- For any ULD, restraints used to react the load in one direction may not be missing / inoperative if restraints in other directions are also missing / inoperative. If this condition exists, tiedowns are required.
- Use of ULD's not specified in this manual require tiedowns for the ULD's gross weight and the specified load factors.
- Pallet position P22 cannot be tied down when a single Size Code K ULD is loaded in the position immediately forward of pallet P22.

APPLICABLE CONFIGURATIONS
All

BOEING PROPRIETARY
Export Controlled by ECCN 9E991

FORWARD COMPARTMENT UNIT LOAD DEVICE LOAD LIMITS (Continued)

Missing / Inoperative Restraints

Maximum loads for unit load devices shown in this section assume all equipment is installed and operable. When equipment is missing or inoperable, allowable loading may be reduced. Certain instances of missing or inoperable equipment reduce the allowable loading to zero.

CAUTION CARE MUST BE EXERCISED DURING LOADING AND UNLOADING OF UNIT LOAD DEVICES WHEN EQUIPMENT IS MISSING / INOPERATIVE TO PREVENT DAMAGE TO AIRPLANE STRUCTURE. IT IS ADVISABLE THAT MALFUNCTIONING EQUIPMENT BE REPAIRED OR REPLACED TO PREVENT DAMAGE TO OPERATIVE EQUIPMENT.

The following equipment malfunctions do not constitute a load limit restriction:

- Jammed or missing sill rollers without vertical restraint
- Jammed or missing balls in a ball mat
- Jammed or missing rollers in a roller unit
- Split Side Guide rail

Restraint systems fall into three categories: side restraints, side/vertical restraints and forward/aft restraints. Each restraint direction is considered separately when missing / inoperative restraint equipment exists (i.e. forward, aft, side left, side right and vertical loading). When a missing or inoperative restraint condition exists, the allowable weight is determined by considering each restraint direction separately and using the most limiting resultant allowable weight.

Missing / inoperative restraints must not be adjacent to each other.

A lock is considered to be fully effective at the corner of a ULD if the centerline of the lockhead lines up with the tangent of the ULD corner radius.

NOTE An empty ULD can carried in any position provided at least one restraint is operable in each (forward, aft, left and right) direction. In addition, ULDs less than 63 inches in height require one vertical restraint on each edge (forward, aft, left and right) to be operable.

BOEING PROPRIETARY
Export Controlled by ECCN 9E991

FORWARD COMPARTMENT UNIT LOAD DEVICE LOAD LIMITS (Continued)

Size Code A

The following table shows the maximum allowable zone weights, in pounds, with missing or inoperative restraints:

MAXIMUM ALLOWABLE LOADS WITH MISSING / INOPERATIVE RESTRAINTS SIZE CODE A - LB									
RESTRAINT		PALLET POSITION							
DIRECTION	NUMBER OPERABLE	11P	12P	13P	21P	22P	23P	24P	25P
Maximum Load		10310	10310	10310	10310	10310	10310	10310	11250
Vertical	18				10310		10310		
	17			10310	10310		10310		
	11 - 16	10310	10310	10310	10310	10310	10310	10310	11250
	10	0	0	0	0	0	0	0	0
Forward	4	10310	10310	10200	10310	10310	10310	10200	11250
	3	10310	9200	7650	8430	8430	8430	7650	8430
	2	10310	9160	5100	5620	5620	5620	5100	5620
	1	0	0	0	0	0	0	0	0
Aft	5 - 8								11250
	4	10310	10310	10310	10310	10310	10310	10310	11250
	3	8430	10310	10310	10310	10310	10310	10310	0
	2	5620	9370	9040	9040	9040	9040	9040	0
	1	0	0	0	0	0	0	0	0
Left	5			10310	10310		10310		
	4	10310	10310	10310	10310	10310	10310	10310	11250
	3	8440	10310	8440	8440	8440	8440	8440	8440
	2	5620	10310	5620	5620	5620	5620	5620	5620
	1	0	0	0	0	0	0	0	0
Right	5				10310		10310		
	4	10310	10310	10310	10310	10310	10310	10310	11250
	3	8440	10310	8440	8440	8440	8440	8440	8440
	2	5620	9900	5620	5620	5620	5620	5620	5620
	1	0	0	0	0	0	0	0	0

APPLICABLE CONFIGURATIONS
All

BOEING PROPRIETARY
Export Controlled by ECCN 9E991

FORWARD COMPARTMENT UNIT LOAD DEVICE LOAD LIMITS (Continued)

The following table shows the maximum allowable zone weights, in kilograms, with missing or inoperative restraints:

MAXIMUM ALLOWABLE LOADS WITH MISSING / INOPERATIVE RESTRAINTS SIZE CODE A - KG									
RESTRAINT		PALLET POSITION							
DIRECTION	NUMBER OPERABLE	11P	12P	13P	21P	22P	23P	24P	25P
Maximum Load		4676	4676	4676	4676	4676	4676	4676	5102
Vertical	18				4676		4676		
	17			4676	4676		4676		
	11 - 16	4676	4676	4676	4676	4676	4676	4676	5102
	10	0	0	0	0	0	0	0	0
Forward	4	4676	4676	4626	4676	4676	4676	4676	5102
	3	4676	4173	3469	3823	3823	3823	3469	3823
	2	4676	4154	2313	2549	2549	2549	2313	2549
	1	0	0	0	0	0	0	0	0
Aft	5 - 8								5102
	4	4676	4676	4676	4676	4676	4676	4676	5102
	3	3823	4676	4676	4676	4676	4676	4676	0
	2	2549	4250	4100	4100	4100	4100	4100	0
	1	0	0	0	0	0	0	0	0
Left	5			4676	4676		4676		
	4	4676	4676	4676	4676	4676	4676	4676	5102
	3	3828	4676	3828	3828	3828	3828	3828	3828
	2	2549	4676	2549	2549	2549	2549	2549	2549
	1	0	0	0	0	0	0	0	0
Right	5				4676		4676		
	4	4676	4676	4676	4676	4676	4676	4676	5102
	3	3828	4676	3828	3828	3828	3828	3828	3828
	2	2549	4490	2549	2549	2549	2549	2549	2549
	1	0	0	0	0	0	0	0	0

APPLICABLE CONFIGURATIONS
All

BOEING PROPRIETARY
Export Controlled by ECCN 9E991

FORWARD COMPARTMENT UNIT LOAD DEVICE LOAD LIMITS (Continued)

Size Code M

The following table shows the maximum allowable zone weights, in pounds, with missing or inoperative restraints:

MAXIMUM ALLOWABLE LOADS WITH MISSING / INOPERATIVE RESTRAINTS SIZE CODE M - LB									
RESTRAINT		PALLET POSITION							
DIRECTION	NUMBER OPERABLE	11P	12P	13P	21P	22P	23P	24P	25P
Maximum Load		11250	11250	11250	11250	11250	11250	11250	14000
Vertical	17 - 18			11250	11250		11250		14000
	11 - 16	11250	11250	11250	11250	11250	11250	11250	14000
	10	0	0	0	0	0	0	0	0
Forward	4	11250	11250	11250	11250	11250	11250	11250	14000
	3	11250	9200	11250	11250	11250	11250	11250	13560
	2	11250	9160	9040	9040	9040	9040	9040	9040
	1	0	0	0	0	0	0	0	0
Aft	5 - 8								14000
	4	11250	11250	11250	11250	11250	11250	11250	14000
	3	7500	11250	11250	11250	11250	11250	11250	0
	2	7460	9040	9040	9040	9040	9040	9040	0
	1	0	0	0	0	0	0	0	0
Left	5			11250	11250		11250		14000
	4	11250	11250	11250	11250	11250	11250	11250	11250
	3	8440	11250	8440	8440	8440	8440	8440	8440
	2	5620	11250	5620	5620	5620	5620	5620	5620
	1	0	0	0	0	0	0	0	0
Right	5			11250	11250		11250		14000
	4	11250	11250	11250	11250	11250	11250	11250	11250
	3	8440	11250	8440	8440	8440	8440	8440	8440
	2	5620	9900	5620	5620	5620	5620	5620	5620
	1	0	0	0	0	0	0	0	0

APPLICABLE CONFIGURATIONS
All

BOEING PROPRIETARY
Export Controlled by ECCN 9E991

FORWARD COMPARTMENT UNIT LOAD DEVICE LOAD LIMITS (Continued)

The following table shows the maximum allowable zone weights, in kilograms, with missing or inoperative restraints:

MAXIMUM ALLOWABLE LOADS WITH MISSING / INOPERATIVE RESTRAINTS SIZE CODE M - KG									
RESTRAINT		PALLET POSITION							
DIRECTION	NUMBER OPERABLE	11P	12P	13P	21P	22P	23P	24P	25P
Maximum Load		5102	5102	5102	5102	5102	5102	5102	6350
Vertical	17 - 18			5102	5102		5102		6350
	11 - 16	5102	5102	5102	5102	5102	5102	5102	6350
	10	0	0	0	0	0	0	0	0
Forward	4	5102	5102	5102	5102	5102	5102	5102	6350
	3	5102	4173	5102	5102	5102	5102	5102	6150
	2	5102	4154	4100	4100	4100	4100	4100	4100
	1	0	0	0	0	0	0	0	0
Aft	5 - 8								6350
	4	5102	5102	5102	5102	5102	5102	5102	6350
	3	3401	5102	5102	5102	5102	5102	5102	0
	2	3383	4100	4100	4100	4100	4100	4100	0
	1	0	0	0	0	0	0	0	0
Left	5			5102	5102		5102		6350
	4	5102	5102	5102	5102	5102	5102	5102	5102
	3	3828	5102	3828	3828	3828	3828	3828	3828
	2	2549	5102	2549	2549	2549	2549	2549	2549
	1	0	0	0	0	0	0	0	0
Right	5			5102	5102		5102		6350
	4	5102	5102	5102	5102	5102	5102	5102	5102
	3	3828	5102	3828	3828	3828	3828	3828	3828
	2	2549	4490	2549	2549	2549	2549	2549	2549
	1	0	0	0	0	0	0	0	0

BOEING PROPRIETARY
Export Controlled by ECCN 9E991

FORWARD COMPARTMENT UNIT LOAD DEVICE LOAD LIMITS (Continued)

Size Code N

The following table shows the maximum allowable zone weights, in pounds, with missing or inoperative restraints:

MAXIMUM ALLOWABLE LOADS WITH MISSING / INOPERATIVE RESTRAINTS SIZE CODE N - LB									
RESTRAINT		PALLET POSITION							
DIRECTION	NUMBER OPERABLE	11P	12P	13P	21P	22P	23P	24P	25P
Maximum Load		5400	5400	5400	5400	5400	5400	5400	5400
Vertical	14			5400	5400		5400		5400
	13			5400	5400		5400		5400
	8 - 12	5400	5400	5400	5400	5400	5400	5400	5400
	7	0	0	0	0	0	0	0	0
Forward	2	5400	5400	5400	5400	5400	5400	5400	5400
	1	5400	4680	4520	4520	4520	4520	4520	5400
	0	0	0	0	0	0	0	0	0
Aft	3 - 4								5400
	2	5400	5400	5400	5400	5400	5400	5400	5400
	1	4680	4680	4520	4520	4520	4520	4520	5400
	0	0	0	0	0	0	0	0	0
Left	5			5400	5400		5400		5400
	2 - 4	5400	5400	5400	5400	5400	5400	5400	5400
	1	0	0	0	0	0	0	0	0
Right	5			5400	5400		5400		
	2 - 4	5400	5400	5400	5400	5400	5400	5400	5400
	1	0	0	0	0	0	0	0	0

APPLICABLE CONFIGURATIONS
All

BOEING PROPRIETARY
Export Controlled by ECCN 9E991

FORWARD COMPARTMENT UNIT LOAD DEVICE LOAD LIMITS (Continued)

The following table shows the maximum allowable zone weights, in kilograms, with missing or inoperative restraints:

MAXIMUM ALLOWABLE LOADS WITH MISSING / INOPERATIVE RESTRAINTS SIZE CODE N - KG									
RESTRAINT		PALLET POSITION							
DIRECTION	NUMBER OPERABLE	11P	12P	13P	21P	22P	23P	24P	25P
Maximum Load		2449	2449	2449	2449	2449	2449	2449	2449
Vertical	14			2449	2449		2449		2449
	13			2449	2449		2449		2449
	8 - 12	2449	2449	2449	2449	2449	2449	2449	2449
	7	0	0	0	0	0	0	0	0
Forward	2	2449	2449	2449	2449	2449	2449	2449	2449
	1	2449	2122	2050	2050	2050	2050	2050	2449
	0	0	0	0	0	0	0	0	0
Aft	3 - 4								2449
	2	2449	2449	2449	2449	2449	2449	2449	2449
	1	2122	2122	2050	2050	2050	2050	2050	2449
	0	0	0	0	0	0	0	0	0
Left	5			2449	2449		2449		2449
	2 - 4	2449	2449	2449	2449	2449	2449	2449	2449
	1	0	0	0	0	0	0	0	0
Right	5			2449	2449		2449		
	2 - 4	2449	2449	2449	2449	2449	2449	2449	2449
	1	0	0	0	0	0	0	0	0

BOEING PROPRIETARY
Export Controlled by ECCN 9E991

FORWARD COMPARTMENT UNIT LOAD DEVICE LOAD LIMITS (Continued)

Size Code Q Longitudinal

The following table shows the maximum allowable zone weights, in pounds, with missing or inoperative restraints:

MAXIMUM ALLOWABLE LOADS WITH MISSING / INOPERATIVE RESTRAINTS SIZE CODE Q LONGITUDINAL - LB									
RESTRAINT		PALLET POSITION							
DIRECTION	NUMBER OPERABLE	11P	12P	13P	21P	22P	23P	24P	25P
Maximum Load		5400	5400	5400	5400	5400	5400	5400	5400
Vertical	14			5400	5400		5400		5400
	13			5400[a]	5400[a]		5400[a]		5400[a]
	4 - 12	5400[a]	5400[a]	5400[a]	5400[a]	5400[a]	5400[a]	5400[a]	5400[a]
	3	0	0	0	0	0	0	0	0
Forward	2	5400	5400	5400	5400	5400	5400	5400	5400
	1	5400	4680	4520	4520	4520	4520	4520	5400
	0	0	0	0	0	0	0	0	0
Aft	3 - 4								5400
	2	5400	5400	5400	5400	5400	5400	5400	5400
	1	4680	4680	4520	4520	4520	4520	4520	5400
	0	0	0	0	0	0	0	0	0
Left	5			5400	5400		5400		5400
	2 - 4	5400	5400	5400	5400	5400	5400	5400	5400
	1	0	0	0	0	0	0	0	0
Right	5			5400	5400		5400		
	2 - 4	5400	5400	5400	5400	5400	5400	5400	5400
	1	0	0	0	0	0	0	0	0

[a] All end vertical restraints (endstops, pallet locks, lateral guides) must be operable.

APPLICABLE CONFIGURATIONS
All

BOEING PROPRIETARY
Export Controlled by ECCN 9E991

FORWARD COMPARTMENT UNIT LOAD DEVICE LOAD LIMITS (Continued)

The following table shows the maximum allowable zone weights, in kilograms, with missing or inoperative restraints:

MAXIMUM ALLOWABLE LOADS WITH MISSING / INOPERATIVE RESTRAINTS SIZE CODE Q LONGITUDINAL - KG									
RESTRAINT		PALLET POSITION							
DIRECTION	NUMBER OPERABLE	11P	12P	13P	21P	22P	23P	24P	25P
Maximum Load		2449	2449	2449	2449	2449	2449	2449	2449
Vertical	14			2449	2449		2449		2449
	13			2449[a]	2449[a]		2449[a]		2449[a]
	4 - 12	2449[a]	2449[a]	2449[a]	2449[a]	2449[a]	2449[a]	2449[a]	2449[a]
	3	0	0	0	0	0	0	0	0
Forward	2	2449	2449	2449	2449	2449	2449	2449	2449
	1	2449	2122	2050	2050	2050	2050	2050	2449
	0	0	0	0	0	0	0	0	0
Aft	3 - 4								2449
	2	2449	2449	2449	2449	2449	2449	2449	2449
	1	2122	2122	2050	2050	2050	2050	2050	2449
	0	0	0	0	0	0	0	0	0
Left	5			2449	2449		2449		2449
	2 - 4	2449	2449	2449	2449	2449	2449	2449	2449
	1	0	0	0	0	0	0	0	0
Right	5			2449	2449		2449		
	2 - 4	2449	2449	2449	2449	2449	2449	2449	2449
	1	0	0	0	0	0	0	0	0

[a] All end vertical restraints (endstops, pallet locks, lateral guides) must be operable.

APPLICABLE CONFIGURATIONS
All

BOEING PROPRIETARY
Export Controlled by ECCN 9E991

AFT COMPARTMENT UNIT LOAD DEVICE LOAD LIMITS

CARGO RESTRAINT SYSTEM - SIZE CODES K, L, & P

The longitudinal area between each combination of fwd / aft restraints is referred to as a zone. All zones in a cargo compartment are unique, and all restraints within the boundaries of a zone are either down or inoperable. The illustration below identifies the locations of the stops / locks / guides and the associated zones for Size Codes K, L, & P.

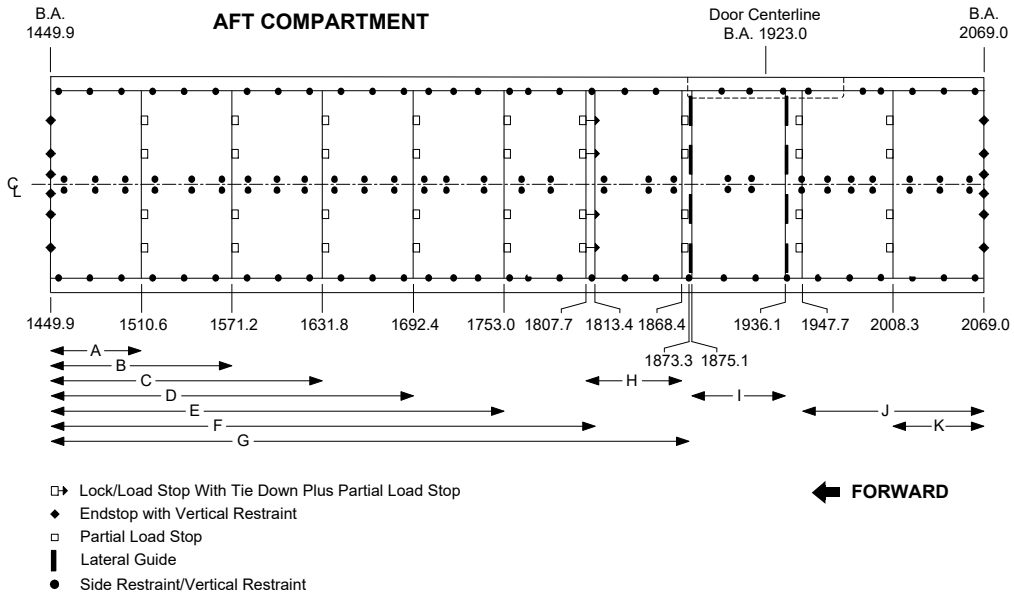

Unit Load Device Intermixing

Size codes K, L, & P ULDs can be intermixed in the cargo compartments, provided that:

- Pallet profile less than LD3-45 must not occupy the first or last position of the string, not allowing other ULDs to overcome the pallet during a forward or aft shift.
- Code size P must not occupy the first, last or doorway position of the string.
- LD-2 containers are paired with another LD-2 or LD-3 container within a string.
- Intermixing of non-certified ULDs must engage the cargo restraint system similar to a certified pallet, and have sufficient strength and rigidity to maintain that engagement under load.
- Non-certified ULD's are greater than 63 inches in height.

If a fwd / aft restraint is broken or inoperative, ULDs can still be intermixed provided:

- The allowable zonal load per the missing restraint section is not exceeded.
- Do not place a pair of LD-2 containers (side by side) against inoperative restraints when intermixing ULDs.

APPLICABLE CONFIGURATIONS
A, B, C, E, F

BOEING PROPRIETARY
Export Controlled by ECCN 9E991

AFT COMPARTMENT UNIT LOAD DEVICE LOAD LIMITS (Continued)

LOAD LIMITS - SIZE CODES K, L, & P

The remaining sections of this subject describe loading considerations, restraint systems, missing or inoperable restraints, and provide maximum allowable loads for each restraint direction under various operational conditions.

Loading Considerations

The allowable weight for each zone is a function of the type of ULD that comes in contact with the forward and aft restraints, the load factors, and by the restraint and ULD capabilities.

CAUTION ENSURE THERE IS SUFFICIENT CLEARANCE BETWEEN THE TOP OF THE CARGO AND THE CARGO BAY CEILING WHILE LOADING AND UNLOADING CARGO. DAMAGE TO THE AIRPLANE CAN OCCUR IF THERE IS NOT SUFFICIENT VERTICAL CLEARANCE.

NOTE Airplanes with the -300ER nose landing gear move differently during loading and unloading than other 777 model airplanes.

Unless otherwise stated, the following guidelines must be followed to determine allowable loads in a zone.

- The operator determines the number of restraints available for each zone.
- The allowable zone weight includes ULD tare. Any load in excess of the allowables specified herein must be restrained by additional tiedowns (refer to CHP-SEC 1-68-00x for tiedown information).
- Allowable weights may further be restricted by limitations in this manual.
- Restraints at the fwd and aft end of a string of containers may be missing at the same time. However, the most limiting allowable zonal load for a missing fwd or aft restraint must be used.
- Missing / inoperative restraints in the same direction cannot be adjacent (i.e. two adjacent side restraints or two adjacent vertical restraints at the forward or aft side of the ULD may not be missing or inoperative). Also, two restraints adjacent to a common corner cannot be missing / inoperable. If this condition exists, the allowable weight of the associated zone is 0 LB (0 KG).
- A missing / inoperative center lateral guide (BL 0.0) is equivalent to one missing restraint in the right lane and one missing restraint in the left lane. This shall not be interpreted as two adjacent missing restraints.
- LD-2 containers must be paired with another LD-2 or LD-3 container.
- LD-2 containers must be loaded in a string and must not occupy the first, last or doorway positions.
- A pair of LD-2's or paired LD-2 and LD-3 containers loaded in a unstrung zone, must be tied down.
- To reduce inadvertent cargo movement, it is recommended that all available restraints, including lateral guides, in unoccupied positions be raised.

APPLICABLE CONFIGURATIONS
A, B, C, E, F

BOEING PROPRIETARY
Export Controlled by ECCN 9E991

AFT COMPARTMENT UNIT LOAD DEVICE LOAD LIMITS (Continued)

- A maximum of two missing or inoperative restraints (one on the left side and one on the right side of the airplane) are allowed in each restraint direction.
- For any ULD, restraints used to react the load in the inboard / outboard directions may not be missing / inoperative if restraints in the fwd / aft directions are also missing / inoperative. If this condition exists, tiedowns are required.

Missing / Inoperative Restraints

Maximum loads for unit load devices shown in this section assume all equipment is installed and operable. When equipment is missing or inoperable, allowable loading may be reduced. Certain instances of missing or inoperable equipment reduce the allowable loading to zero.

CAUTION CARE MUST BE EXERCISED DURING LOADING AND UNLOADING OF UNIT LOAD DEVICES WHEN EQUIPMENT IS MISSING / INOPERATIVE TO PREVENT DAMAGE TO AIRPLANE STRUCTURE. IT IS ADVISABLE THAT MALFUNCTIONING EQUIPMENT BE REPAIRED OR REPLACED TO PREVENT DAMAGE TO OPERATIVE EQUIPMENT.

The following equipment malfunctions do not constitute a load limit restriction:

- Jammed or missing sill rollers without vertical restraint
- Jammed or missing balls in a ball mat
- Jammed or missing rollers in a roller unit
- Split Side Guide rail

Restraint systems fall into three categories: side restraints, side/vertical restraints and forward/aft restraints. Each restraint direction is considered separately when missing / inoperative restraint equipment exists (i.e. forward, aft, side left, side right and vertical loading). When a missing or inoperative restraint condition exists, the allowable weight is determined by considering each restraint direction separately and using the most limiting resultant allowable weight.

Missing / inoperative restraints must not be adjacent to each other.

NOTE An empty ULD can be carried in any position provided at least one restraint is operable in each forward, aft, side left and side right direction. In addition, ULDs less than 63 inches in height require one vertical restraint on each edge (forward, aft, side left and side right) to be operable.

BOEING PROPRIETARY
Export Controlled by ECCN 9E991

AFT COMPARTMENT UNIT LOAD DEVICE LOAD LIMITS (Continued)

Forward and Aft Restraints (Pounds) - Size Codes K, L, & P

The following table shows the maximum allowable zone weights, in pounds, with missing or inoperative forward / aft restraints:

MAXIMUM ALLOWABLE LOADS WITH MISSING / INOPERATIVE RESTRAINTS SIZE CODES K, L, & P - LB								
ZONE	B.A. IN.	NO. OF POSITIONS	LOAD TYPE[a]	MAXIMUM LOAD[b]	NO. OF RESTRAINTS MISSING / INOPERABLE			
					1 FWD	2 FWD[c]	1 AFT	2 AFT[C]
A	1449.9 to 1510.6	1	1	3500	3500	3500	3500	3500
			2	7000	7000	7000	7000	7000
B	1449.9 to 1571.2	2	1	7000	7000	7000	7000	7000
			2	14000	14000	14000	10760	9970
			5	10500	10500	10500	9240	9090
C	1449.9 to 1631.8	3	1	10500	10500	10500	8830	8830
			2	21000	21000	21000	10760	9970
			3	9700	9700	9700	8830	8830
			4	21000	21000	21000	10760	9970
			5	17500	17500	17500	8830	8830
D	1449.9 to 1692.4	4	1	14000	14000	14000	14000	14000
			2	28000	28000	28000	21620	20030
			3	13200	13200	13200	13200	13200
			4	28000	28000	28000	21620	20030
			5	24500	24500	24500	17740	17740
E	1449.9 to 1753.0	5	1	17500	17500	17500	17500	17500
			2	35000	35000	34860	21620	20030
			3	16700	16700	16700	16700	16700
			4	35000	35000	34860	21620	20030
			5	31500	25670	25670	17740	17740
F	1449.9 to 1813.4	6	1	21000	21000	21000	17740	17740
			2	42000	42000	34860	21620	20030
			3	20200	20200	20200	17740	17740
			4	42000	42000	34860	21620	20030
			5	38500	25670	25670	17740	17740
G	1449.9 to 1873.3	7	1	24500	24500	24500	24500	24500
			2	49000	45500	34860	29950	28090
			3	23700	23700	23700	23700	23700
			4	49000	45500	34860	29950	28090
			5	45500	25670	25670	25700	25700

APPLICABLE CONFIGURATIONS
A, B, C, E, F

BOEING PROPRIETARY
Export Controlled by ECCN 9E991

AFT COMPARTMENT UNIT LOAD DEVICE LOAD LIMITS (Continued)

MAXIMUM ALLOWABLE LOADS WITH MISSING / INOPERATIVE RESTRAINTS SIZE CODES K, L, & P - LB (Continued)								
ZONE	B.A. IN.	NO. OF POSITIONS	LOAD TYPE[a]	MAXIMUM LOAD[b]	NO. OF RESTRAINTS MISSING / INOPERABLE			
					1 FWD	2 FWD[c]	1 AFT	2 AFT[C]
H	1807.7 to 1868.4	1	1	3500	3500	3500	2930	2930
			2	7000	7000	7000	7000	7000
I	1875.1 to 1936.1	1	1	3500	3500	3500	3500	3500
			2	7000	7000	7000	7000	7000
J	1947.7 to 2069.0	2	1	7000	7000	7000	7000	7000
			2	14000	9210	8480	14000	14000
			5	10500	7800	7800	10500	10500
K	2008.3 to 2069.0	1	1	3500	3500	3500	3500	3500
			2	7000	7000	7000	7000	7000

[a] The load types are defined as follows:
1. Size Code K (load per side).
2. Size Code L.
3. Size Code K intermixed with Size Code P (load per side). Size Code K are located at both ends of a string.
4. Size Code L intermixed with Size Code K. Size Code L are located at both ends of a string.
5. Size Code L intermixed with Size Code K. Size Code K is located at one end of a string.

[b] All restraints are operational.

[c] Only one restraint may be missing from each side. Missing / inoperative restraints must not be adjacent to each other.

APPLICABLE CONFIGURATIONS
A, B, C, E, F

BOEING PROPRIETARY
Export Controlled by ECCN 9E991

AFT COMPARTMENT UNIT LOAD DEVICE LOAD LIMITS (Continued)

Forward and Aft Restraints (Kilograms) - Size Codes K, L, & P

The following table shows the maximum allowable zone weights, in kilograms, with missing or inoperative forward / aft restraints:

MAXIMUM ALLOWABLE LOADS WITH MISSING / INOPERATIVE RESTRAINTS SIZE CODES K, L, & P - KG								
ZONE	B.A. IN.	NO. OF POSITIONS	LOAD TYPE[a]	MAXIMUM LOAD[b]	NO. OF RESTRAINTS MISSING / INOPERABLE			
					1 FWD	2 FWD[c]	1 AFT	2 AFT[C]
A	1449.9 to 1510.6	1	1	1587	1587	1587	1587	1587
			2	3175	3175	3175	3175	3175
B	1449.9 to 1571.2	2	1	3175	3175	3175	3175	3175
			2	6350	6350	6350	4880	4522
			5	4762	4762	4762	4191	4123
C	1449.9 to 1631.8	3	1	4762	4762	4762	4005	4005
			2	9525	9525	9525	4880	4522
			3	4399	4399	4399	4005	4005
			4	9525	9525	9525	4880	4522
			5	7937	7937	7937	4005	4005
D	1449.9 to 1692.4	4	1	6350	6350	6350	6350	6350
			2	12700	12700	12700	9806	9085
			3	5987	5987	5987	5987	5987
			4	12700	12700	12700	9806	9085
			5	11113	11113	11113	8046	8046
E	1449.9 to 1753.0	5	1	7937	7937	7937	7937	7937
			2	15875	15875	15812	9806	9085
			3	7574	7574	7574	7574	7574
			4	15875	15875	15812	9806	9085
			5	14288	11643	11643	8046	8046
F	1449.9 to 1813.4	6	1	9525	9525	9525	8046	8046
			2	19050	19050	15812	9806	9085
			3	9162	9162	9162	8046	8046
			4	19050	19050	15812	9806	9085
			5	17463	11643	11643	8046	8046
G	1449.9 to 1873.3	7	1	11113	11113	11113	11113	11113
			2	22226	20638	15812	13585	12741
			3	10750	10750	10750	10750	10750
			4	22226	20638	15812	13585	12741
			5	20638	11643	11643	11657	11657

APPLICABLE CONFIGURATIONS
A, B, C, E, F

BOEING PROPRIETARY
Export Controlled by ECCN 9E991

AFT COMPARTMENT UNIT LOAD DEVICE LOAD LIMITS (Continued)

MAXIMUM ALLOWABLE LOADS WITH MISSING / INOPERATIVE RESTRAINTS SIZE CODES K, L, & P - KG (Continued)								
ZONE	B.A. IN.	NO. OF POSITIONS	LOAD TYPE[a]	MAXIMUM LOAD[b]	NO. OF RESTRAINTS MISSING / INOPERABLE			
					1 FWD	2 FWD[c]	1 AFT	2 AFT[C]
H	1807.7 to 1868.4	1	1	1587	1587	1587	1329	1329
			2	3175	3175	3175	3175	3175
I	1875.1 to 1936.1	1	1	1587	1587	1587	1587	1587
			2	3175	3175	3175	3175	3175
J	1947.7 to 2069.0	2	1	3175	3175	3175	3175	3175
			2	6350	4177	3846	6350	6350
			5	4762	3538	3538	4762	4762
K	2008.3 to 2069.0	1	1	1587	1587	1587	1587	1587
			2	3175	3175	3175	3175	3175

[a] The load types are defined as follows:
1. Size Code K (load per side).
2. Size Code L.
3. Size Code K intermixed with Size Code P (load per side). Size Code K are located at both ends of a string.
4. Size Code L intermixed with Size Code K. Size Code L are located at both ends of a string.
5. Size Code L intermixed with Size Code K. Size Code K is located at one end of a string.

[b] All restraints are operational.

[c] Only one restraint may be missing from each side. Missing / inoperative restraints must not be adjacent to each other.

APPLICABLE CONFIGURATIONS
A, B, C, E, F

BOEING PROPRIETARY
Export Controlled by ECCN 9E991

AFT COMPARTMENT UNIT LOAD DEVICE LOAD LIMITS (Continued)

Side Restraint Only - Size Codes K, L, & P Containers

The following table shows the maximum allowable unit load device weights with missing or inoperative side restraints. The data presented is independant of the type of restraint hardware.

MAXIMUM ALLOWABLE LOAD WITH MISSING / INOPERATIVE RESTRAINTS SIDE RESTRAINTS ONLY - SIZE CODES K, L, & P							
NUMBER OF OPERATIVE RESTRAINTS	ZONE	UNIT LOAD DEVICE SIZE CODE					
		K		L		P	
		LB	KG	LB	KG	LB	KG
3	All except I	3500	1587	7000	3175	2700	1224
	I						
2	All except I	3500	1587	5620	2549	2700	1224
	I	3500	1587	7000	3175		
1	All except I	1750	793	2810	1274	2700	1224
	I	2510	1138	5030	2281		

Side Restraint Only - Size Codes K & L Pallets

The following table shows the maximum allowable unit load device weights in pounds with missing or inoperative side restraints. The data presented is independent of the type of restraint hardware.

MAXIMUM ALLOWABLE LOAD WITH MISSING / INOPERATIVE RESTRAINTS SIDE RESTRAINTS ONLY - SIZE CODES K & L PALLETS - LB											
SIZE CODE	NUMBER OF OPERATIVE RESTRAINTS	PALLET POSITION									
		31	32	33	34	35	36	41	42	43	44
K	3	3500	3500	3500	3500	3500				3500	3500
	2	3500	3500	3500	3500	3500	3500	3500	3500	3500	3500
	1	0	0	0	0	0	0	0	0	0	0
L	3	7000	7000	7000	7000	7000				7000	7000
	2	7000	7000	7000	7000	7000	7000	7000	7000	7000	6550
	1	0	0	0	0	0	0	0	0	0	0

APPLICABLE CONFIGURATIONS
A, B, C, E, F

BOEING PROPRIETARY
Export Controlled by ECCN 9E991

AFT COMPARTMENT UNIT LOAD DEVICE LOAD LIMITS (Continued)

The following table shows the maximum allowable unit load device weights in kilograms with missing or inoperative side restraints. The data presented is independent of the type of restraint hardware.

MAXIMUM ALLOWABLE LOAD WITH MISSING / INOPERATIVE RESTRAINTS SIDE RESTRAINTS ONLY - SIZE CODES K & L PALLETS - KG											
SIZE CODE	NUMBER OF OPERATIVE RESTRAINTS	PALLET POSITION									
		31	32	33	34	35	36	41	42	43	44
K	3	1587	1587	1587	1587	1587				1587	1587
	2	1587	1587	1587	1587	1587	1587	1587	1587	1587	1587
	1	0	0	0	0	0	0	0	0	0	0
L	3	3175	3175	3175	3175	3175				3175	3175
	2	3175	3175	3175	3175	3175	3175	3175	3175	3175	2971
	1	0	0	0	0	0	0	0	0	0	0

Vertical Restraint Only - Size Codes K, L, & P Containers

The following table shows the maximum allowable unit load device weights with missing or inoperative vertical restraints:

MAXIMUM ALLOWABLE LOAD WITH MISSING / INOPERATIVE RESTRAINTS VERTICAL RESTRAINTS ONLY - SIZE CODES K, L, & P							
NUMBER OF OPERATIVE RESTRAINTS	ZONE	UNIT LOAD DEVICE SIZE CODE					
		K		L		P	
		LB	KG	LB	KG	LB	KG
6	All except I	3500	1587	7000	3175		
	I						
5	All except I	3500	1587	7000	3175		
	I						
4	All except I	3500	1587	7000	3175		
	I[a]	3500	1587	7000	3175		
3	All except I	3500	1587	5250	2381	2700	1224
	I[a]	3030	1374	4800	2177		
2	All except I	2720	1233	3500	1587	2700	1224
	I[a]	2270	1029	3275	1485		
1	All except I	0	0	0	0	0	0
	I[a]	0	0	0	0		

[a] Lateral guide vertical restraint flippers are not counted as restraints for Size Codes K, L, or P Containers.

APPLICABLE CONFIGURATIONS
A, B, C, E, F

BOEING PROPRIETARY
Export Controlled by ECCN 9E991

AFT COMPARTMENT UNIT LOAD DEVICE LOAD LIMITS (Continued)

Vertical Restraint Only - Size Codes K & L Pallets

The following table shows the maximum allowable unit load device weights in pounds with missing or inoperative vertical restraints:

MAXIMUM ALLOWABLE LOAD WITH MISSING / INOPERATIVE RESTRAINTS VERTICAL RESTRAINTS ONLY - SIZE CODES K & L PALLETS - LB											
SIZE CODE	NUMBER OF OPERATIVE RESTRAINTS	PALLET POSITION									
		31	32	33	34	35	36	41	42	43	44
K	4-6	3500	3500	3500	3500	3500	3500	3500	3500	3500	3500
	3	3500	3500	3500	3500	3500	3500	3500	3500	3330	3250
	2	2960	2960	2780	2740	2610	2540	2440	2500	2220	2170
	1	0	0	0	0	0	0	0	0	0	0
L	4-6	7000	7000	7000	7000	7000	7000	7000	7000	7000	7000
	3	7000	7000	7000	7000	7000	6900	6630	6350	6030	5890
	2	5360	5360	5030	4960	4730	4600	4420	4230	4020	3920
	1	0	0	0	0	0	0	0	0	0	0

The following table shows the maximum allowable unit load device weights in kilograms with missing or inoperative vertical restraints:

MAXIMUM ALLOWABLE LOAD WITH MISSING / INOPERATIVE RESTRAINTS VERTICAL RESTRAINTS ONLY - SIZE CODES K & L PALLETS - KG											
SIZE CODE	NUMBER OF OPERATIVE RESTRAINTS	PALLET POSITION									
		31	32	33	34	35	36	41	42	43	44
K	4-6	1587	1587	1587	1587	1587	1587	1587	1587	1587	1587
	3	1587	1587	1587	1587	1587	1587	1587	1587	1510	1474
	2	1342	1342	1260	1242	1183	1152	1106	1133	1006	984
	1	0	0	0	0	0	0	0	0	0	0
L	4-6	3175	3175	3175	3175	3175	3175	3175	3175	3175	3175
	3	3175	3175	3175	3175	3175	3129	3007	2880	2735	2671
	2	2431	2431	2281	2249	2145	2086	2004	1918	1823	1778
	1	0	0	0	0	0	0	0	0	0	0

APPLICABLE CONFIGURATIONS
A, B, C, E, F

BOEING PROPRIETARY
Export Controlled by ECCN 9E991

AFT COMPARTMENT UNIT LOAD DEVICE LOAD LIMITS

CARGO RESTRAINT SYSTEM - SIZE CODES K, L, P AND Q

The longitudinal area between each combination of fwd / aft restraints is referred to as a zone. All zones in a cargo compartment are unique, and all restraints within the boundaries of a zone are either down or inoperable. The illustration below identifies the locations of the stops / locks / guides and the associated zones for Size Codes K, L, P and Q.

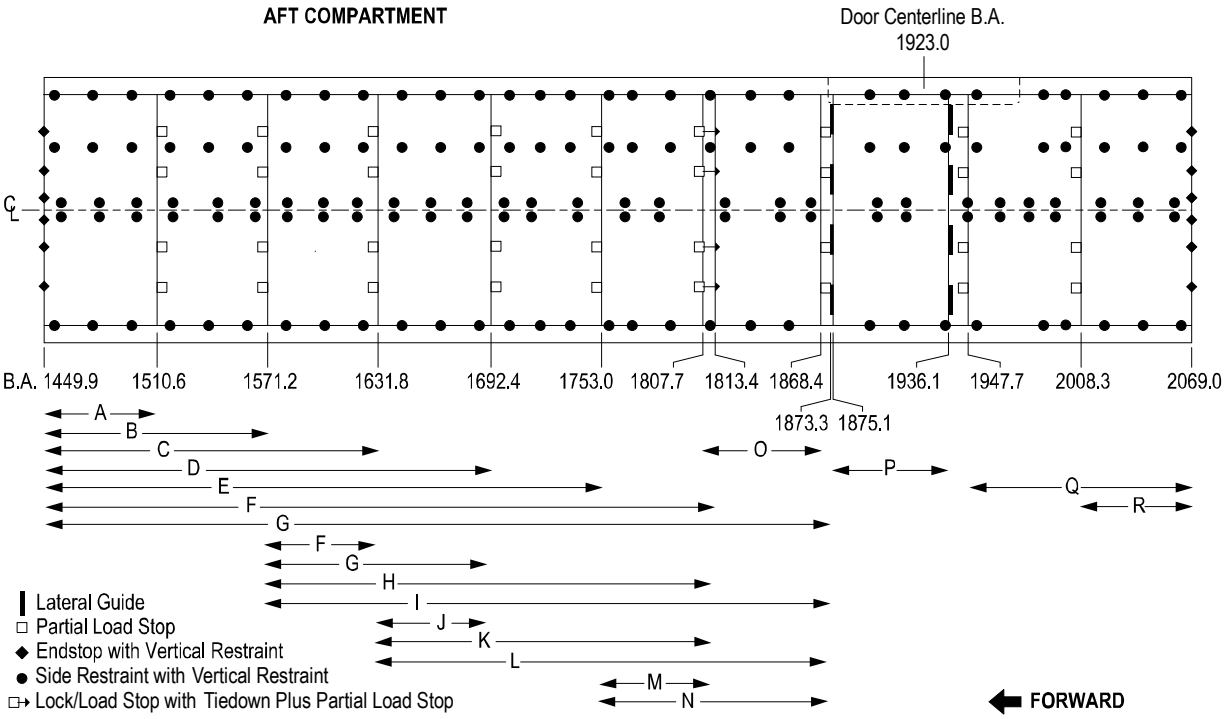

Unit Load Device Intermixing

Size codes K, L, & P ULDs can be intermixed in the cargo compartments, provided that:

- Pallet profile less than LD3-45 must not occupy the first or last position of the string, not allowing other ULDs to overcome the pallet during a forward or aft shift.
- Code size P must not occupy the first, last or doorway position of the string.
- LD-2 containers are paired with another LD-2 or LD-3 container within a string.
- Intermixing of non-certified ULDs must engage the cargo restraint system similar to a certified pallet, and have sufficient strength and rigidity to maintain that engagement under load.
- Non-certified ULD's are greater than 63 inches in height.

If a fwd / aft restraint is broken or inoperative, ULDs can still be intermixed provided:

- The allowable zonal load per the missing restraint section is not exceeded.
- Do not place a pair of LD-2 containers (side by side) against inoperative restraints when intermixing ULDs.

APPLICABLE CONFIGURATIONS
D

BOEING PROPRIETARY
Export Controlled by ECCN 9E991

AFT COMPARTMENT UNIT LOAD DEVICE LOAD LIMITS (Continued)

LOAD LIMITS - SIZE CODES K, L, P AND Q

The remaining sections of this subject describe loading considerations, restraint systems, missing or inoperable restraints, and provide maximum allowable loads for each restraint direction under various operational conditions.

Loading Considerations

The allowable weight for each zone is a function of the type of ULD that comes in contact with the forward and aft restraints, the load factors, and by the restraint and ULD capabilities.

CAUTION ENSURE THERE IS SUFFICIENT CLEARANCE BETWEEN THE TOP OF THE CARGO AND THE CARGO BAY CEILING WHILE LOADING AND UNLOADING CARGO. DAMAGE TO THE AIRPLANE CAN OCCUR IF THERE IS NOT SUFFICIENT VERTICAL CLEARANCE.

NOTE Airplanes with the -300ER nose landing gear move differently during loading and unloading than other 777 model airplanes.

Unless otherwise stated, the following guidelines must be followed to determine allowable loads in a zone.

- The operator determines the number of restraints available for each zone.
- The allowable zone weight includes ULD tare. Any load in excess of the allowables specified herein must be restrained by additional tiedowns (refer to CHP-SEC 1-68-00x for tiedown information).
- Allowable weights may further be restricted by limitations in this manual.
- Restraints at the fwd and aft end of a string of containers may be missing at the same time. However, the most limiting allowable zonal load for a missing fwd or aft restraint must be used.
- Missing / inoperative restraints in the same direction cannot be adjacent (i.e. two adjacent side restraints or two adjacent vertical restraints at the forward or aft side of the ULD may not be missing or inoperative). Also, two restraints adjacent to a common corner cannot be missing / inoperable. If this condition exists, the allowable weight of the associated zone is 0 LB (0 KG).
- A missing / inoperative center lateral guide (BL 0.0) is equivalent to one missing restraint in the right lane and one missing restraint in the left lane. This shall not be interpreted as two adjacent missing restraints.
- LD-2 containers must be paired with another LD-2 or LD-3 container.
- LD-2 containers must be loaded in a string and must not occupy the first, last or doorway positions.
- A pair of LD-2's or paired LD-2 and LD-3 containers loaded in a unstrung zone, must be tied down.
- To reduce inadvertent cargo movement, it is recommended that all available restraints, including lateral guides, in unoccupied positions be raised.

APPLICABLE CONFIGURATIONS
D

BOEING PROPRIETARY
Export Controlled by ECCN 9E991

AFT COMPARTMENT UNIT LOAD DEVICE LOAD LIMITS (Continued)

- A maximum of two missing or inoperative restraints (one on the left side and one on the right side of the airplane) are allowed in each restraint direction.
- For any ULD, restraints used to react the load in the inboard / outboard directions may not be missing / inoperative if restraints in the fwd / aft directions are also missing / inoperative. If this condition exists, tiedowns are required.

Missing / Inoperative Restraints

Maximum loads for unit load devices shown in this section assume all equipment is installed and operable. When equipment is missing or inoperable, allowable loading may be reduced. Certain instances of missing or inoperable equipment reduce the allowable loading to zero.

CAUTION CARE MUST BE EXERCISED DURING LOADING AND UNLOADING OF UNIT LOAD DEVICES WHEN EQUIPMENT IS MISSING / INOPERATIVE TO PREVENT DAMAGE TO AIRPLANE STRUCTURE. IT IS ADVISABLE THAT MALFUNCTIONING EQUIPMENT BE REPAIRED OR REPLACED TO PREVENT DAMAGE TO OPERATIVE EQUIPMENT.

The following equipment malfunctions do not constitute a load limit restriction:

- Jammed or missing sill rollers without vertical restraint
- Jammed or missing balls in a ball mat
- Jammed or missing rollers in a roller unit
- Split Side Guide rail

Restraint systems fall into three categories: side restraints, side/vertical restraints and forward/aft restraints. Each restraint direction is considered separately when missing / inoperative restraint equipment exists (i.e. forward, aft, side left, side right and vertical loading). When a missing or inoperative restraint condition exists, the allowable weight is determined by considering each restraint direction separately and using the most limiting resultant allowable weight.

Missing / inoperative restraints must not be adjacent to each other.

NOTE An empty ULD can be carried in any position provided at least one restraint is operable in each forward, aft, side left and side right direction. In addition, ULDs less than 63 inches in height require one vertical restraint on each edge (forward, aft, side left and side right) to be operable.

BOEING PROPRIETARY
Export Controlled by ECCN 9E991

AFT COMPARTMENT UNIT LOAD DEVICE LOAD LIMITS (Continued)

Forward and Aft Restraints (Pounds) - Size Codes K, L, P and Q

The following table shows the maximum allowable zone weights, in pounds, with missing or inoperative forward / aft restraints:

MAXIMUM ALLOWABLE LOADS WITH MISSING / INOPERATIVE RESTRAINTS SIZE CODES K, L, P AND Q - LB								
ZONE	B.A. IN.	NO. OF POSITIONS	LOAD TYPE[a]	MAXIMUM LOAD[b]	NO. OF RESTRAINTS MISSING / INOPERABLE			
					1 FWD	2 FWD[c]	1 AFT	2 AFT[c]
A	1449.9 to 1510.6	1	1	3500	3500	3500	3500	3500
			2	5400	TBD	TBD	TBD	TBD
			3	7000	7000	7000	7000	7000
B	1449.9 to 1631.8	3	1	10500	10500	10500	8830	8830
			2	16200	TBD	TBD	TBD	TBD
			3	21000	21000	21000	10760	9970
			4	9700	9700	9700	8830	8830
			5	21000	21000	21000	10760	9970
			6	19400	TBD	TBD	TBD	TBD
			7	17500	17500	17500	8830	8830
C	1449.9 to 1692.4	4	1	14000	14000	14000	14000	14000
			2	21600	TBD	TBD	TBD	TBD
			3	28000	28000	28000	21620	20030
			4	13200	13200	13200	13200	13200
			5	28000	28000	28000	21620	20030
			6	26400	TBD	TBD	TBD	TBD
			7	24500	24500	24500	17740	17740
D	1449.9 to 1813.4	6	1	21000	21000	21000	17740	17740
			2	32400	TBD	TBD	TBD	TBD
			3	42000	42000	34860	21620	20030
			4	20200	20200	20200	17740	17740
			5	42000	42000	34860	21620	20030
			6	40400	TBD	TBD	TBD	TBD
			7	15170	15170	15170	15170	15170
E	1449.9 to 1873.3	7	1	24500	24500	24500	24500	24500
			2	37800	TBD	TBD	TBD	TBD
			3	49000	45500	34860	25270	25150
			4	23700	23700	23700	23700	23700
			5	49000	45500	34860	25270	25150
			6	47400	TBD	TBD	TBD	TBD
			7	45500	25670	25670	25200	20640

APPLICABLE CONFIGURATIONS
D

BOEING PROPRIETARY
Export Controlled by ECCN 9E991

AFT COMPARTMENT UNIT LOAD DEVICE LOAD LIMITS (Continued)

MAXIMUM ALLOWABLE LOADS WITH MISSING / INOPERATIVE RESTRAINTS SIZE CODES K, L, P AND Q - LB (Continued)								
ZONE	B.A. IN.	NO. OF POSITIONS	LOAD TYPE[a]	MAXIMUM LOAD[b]	NO. OF RESTRAINTS MISSING / INOPERABLE			
					1 FWD	2 FWD[c]	1 AFT	2 AFT[c]
F	1571.2 to 1631.8	1	1	3500	3500	3500	3500	3500
			2	5400	TBD	TBD	TBD	TBD
			3	7000	7000	7000	7000	7000
G	1571.2 to 1692.4	2	1	7000	7000	7000	7000	7000
			2	10800	TBD	TBD	TBD	TBD
			3	14000	14000	14000	14000	14000
			6	12400	TBD	TBD	TBD	TBD
			7	10500	10500	10500	10500	10500
H	1571.2 to 1813.4	4	1	14000	12640	12640	14000	14000
			2	21600	TBD	TBD	TBD	TBD
			3	28000	15410	14280	21620	20030
			4	13200	12640	12640	13200	13200
			5	28000	15410	14280	21620	20030
			6	26400	TBD	TBD	TBD	TBD
			7	15170	14930	13300	15170	15170
I	1571.2 to 1873.3	5	1	17500	12640	12640	17500	17500
			2	27000	TBD	TBD	TBD	TBD
			3	35000	15410	14280	25270	25150
			4	16700	12640	12640	16700	16700
			5	35000	15410	14280	25270	25150
			6	33400	TBD	TBD	TBD	TBD
			7	31500	14930	13300	25200	20640
J	1631.8 to 1692.4	1	1	3500	3500	3500	3500	3500
			2	5400	TBD	TBD	TBD	TBD
			3	7000	7000	7000	7000	7000
K	1631.8 to 1813.4	3	1	10500	9280	9280	10500	10500
			2	16200	TBD	TBD	TBD	TBD
			3	21000	10280	9760	21000	20030
			4	9700	9700	9700	9700	9700
			5	21000	10280	9760	21000	20030
			6	19400	TBD	TBD	TBD	TBD
			7	9280	9280	9280	9280	9280

APPLICABLE CONFIGURATIONS
D

BOEING PROPRIETARY
Export Controlled by ECCN 9E991

AFT COMPARTMENT UNIT LOAD DEVICE LOAD LIMITS (Continued)

MAXIMUM ALLOWABLE LOADS WITH MISSING / INOPERATIVE RESTRAINTS SIZE CODES K, L, P AND Q - LB (Continued)								
ZONE	B.A. IN.	NO. OF POSITIONS	LOAD TYPE[a]	MAXIMUM LOAD[b]	NO. OF RESTRAINTS MISSING / INOPERABLE			
					1 FWD	2 FWD[c]	1 AFT	2 AFT[c]
L	1631.8 to 1873.3	4	1	14000	9280	9280	14000	14000
			2	21600	TBD	TBD	TBD	TBD
			3	28000	10280	9760	25270	25150
			4	13200	9280	9280	13200	13200
			5	28000	10280	9760	25270	25150
			6	26400	TBD	TBD	TBD	TBD
			7	9280	9280	9280	9280	9280
M	1753.0 to 1813.4	1	1	3500	3500	3500	3500	3500
			2	5400	TBD	TBD	TBD	TBD
			3	7000	6160	5710	7000	7000
N	1753.0 to 1873.3	2	1	7000	5060	5060	7000	7000
			2	10800	TBD	TBD	TBD	TBD
			3	14000	6160	5710	14000	14000
			6	12400	TBD	TBD	TBD	TBD
			7	5060	5060	5060	5060	5060
O	1807.7 to 1868.4	1	1	3500	3500	3500	2930	2930
			2	5400	TBD	TBD	TBD	TBD
			3	7000	7000	7000	7000	7000
P	1875.1 to 1936.1	1	1	3500	3500	3500	3500	3500
			2	5400	TBD	TBD	TBD	TBD
			3	7000	7000	7000	7000	7000
Q	1947.7 to 2069.0	2	1	7000	7000	7000	7000	7000
			2	10800	TBD	TBD	TBD	TBD
			3	14000	9210	8480	14000	14000
			6	12400	TBD	TBD	TBD	TBD
			7	10500	7800	7800	10500	10500

APPLICABLE CONFIGURATIONS
D

BOEING PROPRIETARY
Export Controlled by ECCN 9E991

AFT COMPARTMENT UNIT LOAD DEVICE LOAD LIMITS (Continued)

MAXIMUM ALLOWABLE LOADS WITH MISSING / INOPERATIVE RESTRAINTS SIZE CODES K, L, P AND Q - LB (Continued)								
ZONE	B.A. IN.	NO. OF POSITIONS	LOAD TYPE[a]	MAXIMUM LOAD[b]	NO. OF RESTRAINTS MISSING / INOPERABLE			
					1 FWD	2 FWD[c]	1 AFT	2 AFT[c]
R	2008.3 to 2069.0	1	1	3500	3500	3500	3500	3500
			2	5400	TBD	TBD	TBD	TBD
			3	7000	7000	7000	7000	7000

[a] The load types are defined as follows:
1. Size Code K (load per side).
2. Size Code Q.
3. Size Code L.
4. Size Code K intermixed with Size Code P (load per side). Size Code K are located at both ends of a string.
5. Size Code L intermixed with Size Code K. Size Code L are located at both ends of a string.
6. Size Code L intermixed with Size Code Q. Size Code Q is located at one end of a string.
7. Size Code L intermixed with Size Code K. Size Code K is located at one end of a string.

[b] All restraints are operational.

[c] Only one restraint may be missing from each side. Missing / inoperative restraints must not be adjacent to each other.

BOEING PROPRIETARY
Export Controlled by ECCN 9E991

AFT COMPARTMENT UNIT LOAD DEVICE LOAD LIMITS (Continued)

Forward and Aft Restraints (Kilograms) - Size Codes K, L, P and Q

The following table shows the maximum allowable zone weights, in kilograms, with missing or inoperative forward / aft restraints:

MAXIMUM ALLOWABLE LOADS WITH MISSING / INOPERATIVE RESTRAINTS SIZE CODES K, L, P AND Q - KG								
ZONE	B.A. IN.	NO. OF POSITIONS	LOAD TYPE[a]	MAXIMUM LOAD[b]	NO. OF RESTRAINTS MISSING / INOPERABLE			
					1 FWD	2 FWD[c]	1 AFT	2 AFT[c]
A	1449.9 to 1510.6	1	1	1587	1587	1587	1587	1587
			2	2449	TBD	TBD	TBD	TBD
			3	3175	3175	3175	3175	3175
B	1449.9 to 1631.8	3	1	4762	4762	4762	4005	4005
			2	7348	TBD	TBD	TBD	TBD
			3	9525	9525	9525	4880	4522
			4	4399	4399	4399	4005	4005
			5	9525	9525	9525	4880	4522
			6	8799	TBD	TBD	TBD	TBD
			7	7937	7937	7937	4005	4005
C	1449.9 to 1692.4	4	1	6350	6350	6350	6350	6350
			2	9797	TBD	TBD	TBD	TBD
			3	12700	12700	12700	9806	9085
			4	5987	5987	5987	5987	5987
			5	12700	12700	12700	9806	9085
			6	11974	TBD	TBD	TBD	TBD
			7	11113	11113	11113	8046	8046
D	1449.9 to 1813.4	6	1	9525	9525	9525	8046	8046
			2	14696	TBD	TBD	TBD	TBD
			3	19050	19050	15812	9806	9085
			4	9162	9162	9162	8046	8046
			5	19050	19050	15812	9806	9085
			6	18325	TBD	TBD	TBD	TBD
			7	6880	6880	6880	6880	6880
E	1449.9 to 1873.3	7	1	11113	11113	11113	11113	11113
			2	17145	TBD	TBD	TBD	TBD
			3	22226	20638	15812	11462	11407
			4	10750	10750	10750	10750	10750
			5	22226	20638	15812	11462	11407
			6	21500	TBD	TBD	TBD	TBD
			7	20638	11643	11643	11430	9362

APPLICABLE CONFIGURATIONS
D

BOEING PROPRIETARY
Export Controlled by ECCN 9E991

AFT COMPARTMENT UNIT LOAD DEVICE LOAD LIMITS (Continued)

MAXIMUM ALLOWABLE LOADS WITH MISSING / INOPERATIVE RESTRAINTS SIZE CODES K, L, P AND Q - KG (Continued)								
ZONE	B.A. IN.	NO. OF POSITIONS	LOAD TYPE[a]	MAXIMUM LOAD[b]	NO. OF RESTRAINTS MISSING / INOPERABLE			
					1 FWD	2 FWD[c]	1 AFT	2 AFT[c]
F	1571.2 to 1631.8	1	1	1587	1587	1587	1587	1587
			2	2449	TBD	TBD	TBD	TBD
			3	3175	3175	3175	3175	3175
G	1571.2 to 1692.4	2	1	3175	3175	3175	3175	3175
			2	4898	TBD	TBD	TBD	TBD
			3	6350	6350	6350	6350	6350
			6	5624	TBD	TBD	TBD	TBD
			7	4762	4762	4762	4762	4762
H	1571.2 to 1813.4	4	1	6350	5733	5733	6350	6350
			2	9797	TBD	TBD	TBD	TBD
			3	12700	6989	6477	9806	9085
			4	5987	5733	5733	5987	5987
			5	12700	6989	6477	9806	9085
			6	11974	TBD	TBD	TBD	TBD
			7	6880	6772	6032	6880	6880
I	1571.2 to 1873.3	5	1	7937	5733	5733	7937	7937
			2	12246	TBD	TBD	TBD	TBD
			3	15875	6989	6477	11462	11407
			4	7574	5733	5733	7574	7574
			5	15875	6989	6477	11462	11407
			6	15149	TBD	TBD	TBD	TBD
			7	14288	6772	6032	11430	9362
J	1631.8 to 1892.4	1	1	1587	1587	1587	1587	1587
			2	2449	TBD	TBD	TBD	TBD
			3	3175	3175	3175	3175	3175
K	1631.8 to 1813.4	3	1	4762	4209	4209	4762	4762
			2	7348	TBD	TBD	TBD	TBD
			3	9525	4662	4427	9525	9085
			4	4399	4399	4399	4399	4399
			5	9525	4662	4427	9525	9085
			6	8799	TBD	TBD	TBD	TBD
			7	4209	4209	4209	4209	4209

APPLICABLE CONFIGURATIONS
D

BOEING PROPRIETARY
Export Controlled by ECCN 9E991

AFT COMPARTMENT UNIT LOAD DEVICE LOAD LIMITS (Continued)

MAXIMUM ALLOWABLE LOADS WITH MISSING / INOPERATIVE RESTRAINTS SIZE CODES K, L, P AND Q - KG (Continued)								
ZONE	B.A. IN.	NO. OF POSITIONS	LOAD TYPE[a]	MAXIMUM LOAD[b]	NO. OF RESTRAINTS MISSING / INOPERABLE			
					1 FWD	2 FWD[c]	1 AFT	2 AFT[c]
L	1631.8 to 1873.3	4	1	6350	4209	4209	6350	6350
			2	9797	TBD	TBD	TBD	TBD
			3	12700	4662	4427	11462	11407
			4	5987	4209	4209	5987	5987
			5	12700	4662	4427	11462	11407
			6	11974	TBD	TBD	TBD	TBD
			7	4209	4209	4209	4209	4209
M	1753.0 to 1813.4	1	1	1587	1587	1587	1587	1587
			2	2449	TBD	TBD	TBD	TBD
			3	3175	2794	2590	3175	3175
N	1753.0 to 1873.3	2	1	3175	2295	2295	3175	3175
			2	4898	TBD	TBD	TBD	TBD
			3	6350	2794	2590	6350	6350
			6	5624	TBD	TBD	TBD	TBD
			7	2295	2295	2295	2295	2295
O	1807.7 to 1868.4	1	1	1587	1587	1587	1329	1329
			2	2449	TBD	TBD	TBD	TBD
			3	3175	3175	3175	3175	3175
P	1875.1 to 1936.1	1	1	1587	1587	1587	1587	1587
			2	2449	TBD	TBD	TBD	TBD
			3	3175	3175	3175	3175	3175
Q	1947.7 to 2069.0	2	1	3175	3175	3175	3175	3175
			2	4898	TBD	TBD	TBD	TBD
			3	6350	4177	3846	6350	6350
			6	5624	TBD	TBD	TBD	TBD
			7	4762	3538	3538	4762	4762

APPLICABLE CONFIGURATIONS
D

BOEING PROPRIETARY
Export Controlled by ECCN 9E991

AFT COMPARTMENT UNIT LOAD DEVICE LOAD LIMITS (Continued)

MAXIMUM ALLOWABLE LOADS WITH MISSING / INOPERATIVE RESTRAINTS SIZE CODES K, L, P AND Q - KG (Continued)								
ZONE	B.A. IN.	NO. OF POSITIONS	LOAD TYPE[a]	MAXIMUM LOAD[b]	NO. OF RESTRAINTS MISSING / INOPERABLE			
					1 FWD	2 FWD[c]	1 AFT	2 AFT[c]
R	2008.3 to 2069.0	1	1	1587	1587	1587	1587	1587
			2	2449	TBD	TBD	TBD	TBD
			3	3175	3175	3175	3175	3175

[a] The load types are defined as follows:
1. Size Code K (load per side).
2. Size Code Q.
3. Size Code L.
4. Size Code K intermixed with Size Code P (load per side). Size Code K are located at both ends of a string.
5. Size Code L intermixed with Size Code K. Size Code L are located at both ends of a string.
6. Size Code L intermixed with Size Code Q. Size Code Q is located at one end of a string.
7. Size Code L intermixed with Size Code K. Size Code K is located at one end of a string.

[b] All restraints are operational.

[c] Only one restraint may be missing from each side. Missing / inoperative restraints must not be adjacent to each other.

BOEING PROPRIETARY
Export Controlled by ECCN 9E991

AFT COMPARTMENT UNIT LOAD DEVICE LOAD LIMITS (Continued)

Side Restraint Only - Size Codes K, L, P and Q Containers

The following table shows the maximum allowable unit load device weights with missing or inoperative side restraints. The data presented is independent of the type of restraint hardware.

MAXIMUM ALLOWABLE LOAD WITH MISSING / INOPERATIVE RESTRAINTS SIDE RESTRAINTS ONLY - SIZE CODES K, L, P AND Q									
NUMBER OF OPERATIVE RESTRAINTS	ZONE	UNIT LOAD DEVICE SIZE CODE							
		K		L		P		Q	
		LB	KG	LB	KG	LB	KG	LB	KG
3	All except P	3500	1587	7000	3175	2700	1224	5400	2449
	P								
2	All except P	3500	1587	4920	2231	2700	1224	4920	2231
	P	3500	1587	7000	3175			5400	2449
1	All except P	1750	793	2460	1115	2460	1115	2460	1115
	P	2510	1138	5030	2281			3260	1478

Side Restraint Only - Size Codes K and L Pallets

The following table shows the maximum allowable unit load device weights in pounds with missing or inoperative side restraints. The data presented is independent of the type of restraint hardware.

MAXIMUM ALLOWABLE LOAD WITH MISSING / INOPERATIVE RESTRAINTS SIDE RESTRAINTS ONLY - SIZE CODES K AND L PALLETS - LB											
SIZE CODE	NUMBER OF OPERATIVE RESTRAINTS	PALLET POSITION									
		31	32	33	34	35	36	41	42	43	44
K	3	3500	3500	3500	3500	3500					
	2	3500	3500	3500	3500	3500	3500	3500	3500	3500	3500
	1	0	0	0	0	0	0	0	0	0	0
L	3	7000	7000	7000	7000	7000					
	2	7000	7000	7000	7000	7000	7000	6940	7000	6220	5890
	1	0	0	0	0	0	0	0	0	0	0

APPLICABLE CONFIGURATIONS
D

BOEING PROPRIETARY
Export Controlled by ECCN 9E991

AFT COMPARTMENT UNIT LOAD DEVICE LOAD LIMITS (Continued)

The following table shows the maximum allowable unit load device weights in kilograms with missing or inoperative side restraints. The data presented is independent of the type of restraint hardware.

MAXIMUM ALLOWABLE LOAD WITH MISSING / INOPERATIVE RESTRAINTS SIDE RESTRAINTS ONLY - SIZE CODES K AND L PALLETS - KG											
SIZE CODE	NUMBER OF OPERATIVE RESTRAINTS	PALLET POSITION									
		31	32	33	34	35	36	41	42	43	44
K	3	1587	1587	1587	1587	1587					
	2	1587	1587	1587	1587	1587	1587	1587	1587	1587	1587
	1	0	0	0	0	0	0	0	0	0	0
L	3	3175	3175	3175	3175	3175	3175				
	2	3175	3175	3175	3175	3175	3175	3175	3175	3175	2971
	1	0	0	0	0	0	0	0	0	0	0

Vertical Restraint Only - Size Codes K, L, P and Q Containers

The following table shows the maximum allowable unit load device weights with missing or inoperative vertical restraints:

MAXIMUM ALLOWABLE LOAD WITH MISSING / INOPERATIVE RESTRAINTS VERTICAL RESTRAINTS ONLY - SIZE CODES K, L, P AND Q									
NUMBER OF OPERATIVE RESTRAINTS	ZONE	UNIT LOAD DEVICE SIZE CODE							
		K		L		P		Q	
		LB	KG	LB	KG	LB	KG	LB	KG
6	All except P	3500	1587	7000	3175			5400	2449
	P								
5	All except P	3500	1587	7000	3175			5400	2449
	P								
4	All except P	3500	1587	7000	3175			5400	2449
	P[a]	3500	1587	7000	3175			5400	2449
3	All except P	3500	1587	5250	2381	2700	1224	4450	2018
	P[a]	3030	1374	4800	2177			4472	2028
2	All except P	2720	1233	3500	1587	2700	1224	3100	1406
	P[a]	2270	1029	3275	1485			3110	1410
1	All except P	0	0	0	0	0	0	0	0
	P[a]	0	0	0	0				

[a] Lateral guide vertical restraint flippers are not counted as restraints for Size Codes K, L, P and Q Containers.

APPLICABLE CONFIGURATIONS
D

BOEING PROPRIETARY
Export Controlled by ECCN 9E991

AFT COMPARTMENT UNIT LOAD DEVICE LOAD LIMITS (Continued)

Vertical Restraint Only - Size Codes K and L Pallets

The following table shows the maximum allowable unit load device weights in pounds with missing or inoperative vertical restraints:

MAXIMUM ALLOWABLE LOAD WITH MISSING / INOPERATIVE RESTRAINTS VERTICAL RESTRAINTS ONLY - SIZE CODES K AND L PALLETS - LB											
SIZE CODE	NUMBER OF OPERATIVE RESTRAINTS	PALLET POSITION									
		31	32	33	34	35	36	41	42	43	44
K	4-6	3500	3500	3500	3500	3500	3500	3500	3500	3500	3500
	3	3500	3500	3500	3500	3500	3500	3500	3500	3420	3330
	2	2960	2960	2780	2740	2610	2540	2440	2500	2280	2220
	1	0	0	0	0	0	0	0	0	0	0
L	4-6	7000	7000	7000	7000	7000	7000	6940	7000	6220	5890
	3	7000	7000	7000	7000	7000	6900	6630	6350	6190	5890
	2	5360	5360	5030	4960	4730	4600	4420	4230	4120	4020
	1	0	0	0	0	0	0	0	0	0	0

The following table shows the maximum allowable unit load device weights in kilograms with missing or inoperative vertical restraints:

MAXIMUM ALLOWABLE LOAD WITH MISSING / INOPERATIVE RESTRAINTS VERTICAL RESTRAINTS ONLY - SIZE CODES K AND L PALLETS - KG											
SIZE CODE	NUMBER OF OPERATIVE RESTRAINTS	PALLET POSITION									
		31	32	33	34	35	36	41	42	43	44
K	4-6	1587	1587	1587	1587	1587	1587	1587	1587	1587	1587
	3	1587	1587	1587	1587	1587	1587	1587	1587	1551	1510
	2	1342	1342	1260	1242	1183	1152	1106	1133	1034	1006
	1	0	0	0	0	0	0	0	0	0	0
L	4-6	3175	3175	3175	3175	3175	3175	3147	3175	2821	2671
	3	3175	3175	3175	3175	3175	3129	3007	2880	2807	2671
	2	2431	2431	2281	2249	2145	2086	2004	1918	1868	1823
	1	0	0	0	0	0	0	0	0	0	0

APPLICABLE CONFIGURATIONS
D

BOEING PROPRIETARY
Export Controlled by ECCN 9E991

AFT COMPARTMENT UNIT LOAD DEVICE LOAD LIMITS

CARGO RESTRAINT SYSTEM - SIZE CODES A, M, N & Q LONGITUDINAL

The longitudinal area between each combination of fwd / aft restraints is referred to as a zone. All zones in a cargo compartment are unique, and all restraints within the boundaries of a zone are either down or inoperable. The illustration below identifies the locations of the stops / locks / guides and the associated zones for Size Codes A, M, N & Q Longitudinal.

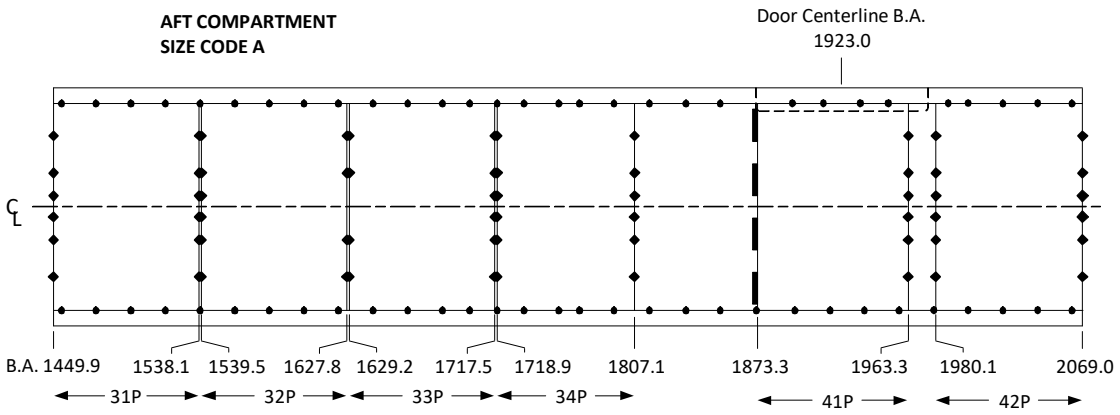

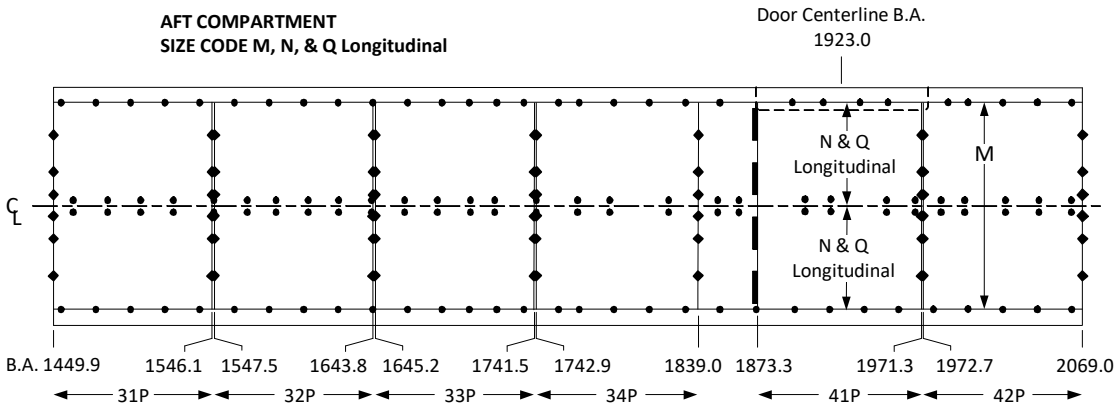

FORWARD

- ◆ Endstop/Pallet Locks with Vertical Restraint
- ● Side Restraint/Vertical Restraint
- ▌ Lateral Guide with Vertical Restraint

APPLICABLE CONFIGURATIONS
All

BOEING PROPRIETARY
Export Controlled by ECCN 9E991

AFT COMPARTMENT UNIT LOAD DEVICE LOAD LIMITS (Continued)

LOAD LIMITS - SIZE CODES A, M, N & Q LONGITUDINAL

The remaining sections of this subject describe loading considerations, restraint systems, missing or inoperable restraints, and provide maximum allowable loads for each restraint direction under various operational conditions.

Loading Considerations

The allowable weight for each zone is a function of the restraint capabilities, the load factors, and the ULD capabilities.

CAUTION ENSURE THERE IS SUFFICIENT CLEARANCE BETWEEN THE TOP OF THE CARGO AND THE CARGO BAY CEILING WHILE LOADING AND UNLOADING CARGO. DAMAGE TO THE AIRPLANE CAN OCCUR IF THERE IS NOT SUFFICIENT VERTICAL CLEARANCE.

NOTE Airplanes with the -300ER nose landing gear move differently during loading and unloading than other 777 model airplanes.

Unless otherwise stated, the following guidelines must be followed to determine allowable loads in a zone.

- The operator determines the number of restraints available for each zone.
- The allowable zone weight includes ULD tare. Any load in excess of the allowables specified herein must be restrained by additional tiedowns (refer to CHP-SEC 1-68-00x for tiedown information).
- Allowable weights may further be restricted by limitations in this manual.
- Missing / inoperative restraints in the same direction cannot be adjacent (i.e. two adjacent side restraints or two adjacent vertical restraints may not be missing or inoperative). Also, two restraints adjacent to a common corner cannot be missing / inoperable. If this condition exists, the allowable weight of the associated zone is 0 LB (0 KG).
- Size Code Q ULDs loaded longitudinally must be a minimum of 63 inches in height (per AS1677) and may have any number of vertical restraints on the side guides or center guides missing without a load limit restriction. Those less than 63 inches must be vertically restrained by tiedowns as specified in CHP-SEC 1-68-00x.
- All ULDs, except Size Code Q, must be restrained vertically along all four sides.
- A missing / inoperative side guide rail is equivalent to the loss of a side restraint.
- For any ULD, restraints used to react the load in one direction may not be missing / inoperative if restraints in other directions are also missing / inoperative. If this condition exists, tiedowns are required.
- Use of ULD's not specified in this manual require tiedowns for the ULD's gross weight and the specified load factors.

APPLICABLE CONFIGURATIONS
All

BOEING PROPRIETARY
Export Controlled by ECCN 9E991

AFT COMPARTMENT UNIT LOAD DEVICE LOAD LIMITS (Continued)

Missing / Inoperative Restraints

Maximum loads for unit load devices shown in this section assume all equipment is installed and operable. When equipment is missing or inoperable, allowable loading may be reduced. Certain instances of missing or inoperable equipment reduce the allowable loading to zero.

CAUTION CARE MUST BE EXERCISED DURING LOADING AND UNLOADING OF UNIT LOAD DEVICES WHEN EQUIPMENT IS MISSING / INOPERATIVE TO PREVENT DAMAGE TO AIRPLANE STRUCTURE. IT IS ADVISABLE THAT MALFUNCTIONING EQUIPMENT BE REPAIRED OR REPLACED TO PREVENT DAMAGE TO OPERATIVE EQUIPMENT.

The following equipment malfunctions do not constitute a load limit restriction:

- Jammed or missing sill rollers without vertical restraint
- Jammed or missing balls in a ball mat
- Jammed or missing rollers in a roller unit
- Split Side Guide rail

Restraint systems fall into three categories: side restraints, side/vertical restraints and forward/aft restraints. Each restraint direction is considered separately when missing / inoperative restraint equipment exists (i.e. forward, aft, side left, side right and vertical loading). When a missing or inoperative restraint condition exists, the allowable weight is determined by considering each restraint direction separately and using the most limiting resultant allowable weight.

Missing / inoperative restraints must not be adjacent to each other.

A lock is considered to be fully effective at the corner of a ULD if the centerline of the lockhead lines up with the tangent of the ULD corner radius.

NOTE An empty ULD can carried in any position provided at least one restraint is operable in each (forward, aft, left and right) direction. In addition, ULDs less than 63 inches in height require one vertical restraint on each edge (forward, aft, left and right) to be operable.

APPLICABLE CONFIGURATIONS
All

BOEING PROPRIETARY
Export Controlled by ECCN 9E991

AFT COMPARTMENT UNIT LOAD DEVICE LOAD LIMITS (Continued)

Size Code A

The following table shows the maximum allowable zone weights, in pounds, with missing or inoperative restraints:

MAXIMUM ALLOWABLE LOADS WITH MISSING / INOPERATIVE RESTRAINTS SIZE CODE A - LB							
RESTRAINT		PALLET POSITION					
DIRECTION	NUMBER OPERABLE	31P	32P	33P	34P	41P	42P
Maximum Load		11250	10310	10310	10310	10310	10310
Vertical	21						10310
	19 - 20	11250	10310	10310	10310		10310
	14 - 18	11250	10310	10310	10310	10310	10310
	13	10810	10310	10310	10310	10240	10310
	12	0	0	0	0	0	0
Forward	5 - 6	11250	10310		10310		10310
	4	11250	10310	10310	10310	10310	10310
	2 - 3	0	0	0	0	10310	0
	1	0	0	0	0	0	0
Aft	6	11250		10310	10310	10310	10310
	5	11250		10310	8500	10310	10310
	4	11250	10310	10310	6800	10310	10310
	3	0	0	0	0	0	0
Left	4	11250	10310	10310	10310	10310	10310
	3	8440	8440	8440	8440	10310	10310
	2	5620	5620	5620	5620	10310	10050
	1	0	0	0	0	0	0
Right	5						10310
	4	11250	10310	10310	10310	10310	10310
	3	8440	8540	8440	8440	8540	8440
	2	5620	5540	5620	5620	5540	5620
	1	0	0	0	0	0	0

APPLICABLE CONFIGURATIONS
All

BOEING PROPRIETARY
Export Controlled by ECCN 9E991

AFT COMPARTMENT UNIT LOAD DEVICE LOAD LIMITS (Continued)

The following table shows the maximum allowable zone weights, in kilograms, with missing or inoperative restraints:

MAXIMUM ALLOWABLE LOADS WITH MISSING / INOPERATIVE RESTRAINTS SIZE CODE A - KG							
RESTRAINT		PALLET POSITION					
DIRECTION	NUMBER OPERABLE	31P	32P	33P	34P	41P	42P
Maximum Load		5102	4676	4676	4676	4676	4676
Vertical	21						4676
	19 - 20	5102	4676	4676	4676		4676
	14 - 18	5102	4676	4676	4676	4676	4676
	13	4903	4676	4676	4676	4644	4676
	12	0	0	0	0	0	0
Forward	5 - 6	5102	4676		4676		4676
	4	5102	4676	4676	4676	4676	4676
	2 - 3	0	0	0	0	4676	0
	1	0	0	0	0	0	0
Aft	6	5102		4676	4676	4676	4676
	5	5102		4676	3855	4676	4676
	4	5102	4676	4676	3084	4676	4676
	3	0	0	0	0	0	0
Left	4	5102	4676	4676	4676	4676	4676
	3	3828	3828	3828	3828	4676	4676
	2	2549	2549	2549	2549	4676	4558
	1	0	0	0	0	0	0
Right	5						4676
	4	5102	4676	4676	4676	4676	4676
	3	3828	3873	3828	3828	3873	3828
	2	2549	2512	2549	2549	2512	2549
	1	0	0	0	0	0	0

BOEING PROPRIETARY
Export Controlled by ECCN 9E991

AFT COMPARTMENT UNIT LOAD DEVICE LOAD LIMITS (Continued)

Size Code M

The following table shows the maximum allowable zone weights, in pounds, with missing or inoperative restraints:

MAXIMUM ALLOWABLE LOADS WITH MISSING / INOPERATIVE RESTRAINTS SIZE CODE M - LB							
RESTRAINT		PALLET POSITION					
DIRECTION	NUMBER OPERABLE	31P	32P	33P	34P	41P	42P
Maximum Load		14000	11250	11250	11250	11250	11250
Vertical	21 - 22	14000		11250	11250		11250
	19 - 20	14000	11250	11250	11250		11250
	18	14000	11250	11250	11250	11250	11250
	17	13920	11250	11250	11250	11250	11250
	16	12410	11250	11250	11250	11250	11250
	15	11880	11250	11250	11250	11250	11250
	14	11350	11250	11250	11250	11250	10950
	13	10810	10810	10810	10810	11250	10420
	12	0	0	0	0	0	0
Forward	5 - 6	14000	11250	11250	11250		11250
	4	14000	11250	11250	11250	11250	11250
	2 - 3	0	0	0	0	11250	0
	1	0	0	0	0	0	0
Aft	6	14000	11250	11250	11250	11250	11250
	5	14000	11250	11250	9370	11250	11250
	4	14000	11250	11250	7500	11250	11250
	3	0	0	0	0	0	0
Left	5	14000		11250	11250		11250
	4	11250	11250	11250	11250	11250	11250
	3	8440	8440	8440	8440	11250	8440
	2	5620	5620	5620	5620	11250	5620
	1	0	0	0	0	0	0
Right	5	14000		11250	11250		11250
	4	11250	11250	11250	11250	11250	11250
	3	8440	8440	8440	8440	8540	8440
	2	5620	5620	5620	5620	5540	5620
	1	0	0	0	0	0	0

APPLICABLE CONFIGURATIONS
All

BOEING PROPRIETARY
Export Controlled by ECCN 9E991

AFT COMPARTMENT UNIT LOAD DEVICE LOAD LIMITS (Continued)

The following table shows the maximum allowable zone weights, in kilograms, with missing or inoperative restraints:

MAXIMUM ALLOWABLE LOADS WITH MISSING / INOPERATIVE RESTRAINTS SIZE CODE M - KG							
RESTRAINT		PALLET POSITION					
DIRECTION	NUMBER OPERABLE	31P	32P	33P	34P	41P	42P
Maximum Load		6350	5102	5102	5102	5102	5102
Vertical	21 - 22	6350		5102	5102		5102
	19 - 20	6350	5102	5102	5102		5102
	18	6350	5102	5102	5102	5102	5102
	17	6314	5102	5102	5102	5102	5102
	16	5629	5102	5102	5102	5102	5102
	15	5388	5102	5102	5102	5102	5102
	14	5148	5102	5102	5102	5102	4966
	13	4903	4903	4903	4903	5102	4726
	12	0	0	0	0	0	0
Forward	5 - 6	6350	5102	5102	5102		5102
	4	6350	5102	5102	5102	5102	5102
	2 - 3	0	0	0	0	5102	0
	1	0	0	0	0	0	0
Aft	6	6350	5102	5102	5102	5102	5102
	5	6350	5102	5102	4250	5102	5102
	4	6350	5102	5102	3401	5102	5102
	3	0	0	0	0	0	0
Left	5	6350		5102	5102		5102
	4	5102	5102	5102	5102	5102	5102
	3	3828	3828	3828	3828	5102	3828
	2	2549	2549	2549	2549	5102	2549
	1	0	0	0	0	0	0
Right	5	6350		5102	5102		5102
	4	5102	5102	5102	5102	5102	5102
	3	3828	3828	3828	3828	3873	3828
	2	2549	2549	2549	2549	2512	2549
	1	0	0	0	0	0	0

APPLICABLE CONFIGURATIONS
All

BOEING PROPRIETARY
Export Controlled by ECCN 9E991

AFT COMPARTMENT UNIT LOAD DEVICE LOAD LIMITS (Continued)

Size Code N

The following table shows the maximum allowable zone weights, in pounds, with missing or inoperative restraints:

MAXIMUM ALLOWABLE LOADS WITH MISSING / INOPERATIVE RESTRAINTS SIZE CODE N - LB							
RESTRAINT		PALLET POSITION					
DIRECTION	NUMBER OPERABLE	31P	32P	33P	34P	41P	42P
Maximum Load		5400	5400	5400	5400	5400	5400
Vertical	16	5400					5400
	14 - 15	5400	5400	5400	5400		5400
	9 - 13	5400	5400	5400	5400	5400	5400
	8	0	0	0	0	0	0
Forward	3	5400	5400	5400	5400		5400
	2	5400	5400	5400	5400	5400	5400
	1	5400	4520	4520	4520	0	4520
	0	0	0	0	0	0	0
Aft	2 - 3	5400	5400	5400	5400	5400	5400
	1	4520	4520	4520	4520	4520	5400
	0	0	0	0	0	0	0
Left	5	5400		5400	5400		5400
	2 - 4	5400	5400	5400	5400	5400	5400
	1	0	0	0	0	0	0
Right	5	5400	5400				5400
	2 - 4	5400	5400	5400	5400	5400	5400
	1	0	0	0	0	0	0

APPLICABLE CONFIGURATIONS
All

BOEING PROPRIETARY
Export Controlled by ECCN 9E991

AFT COMPARTMENT UNIT LOAD DEVICE LOAD LIMITS (Continued)

The following table shows the maximum allowable zone weights, in kilograms, with missing or inoperative restraints:

MAXIMUM ALLOWABLE LOADS WITH MISSING / INOPERATIVE RESTRAINTS SIZE CODE N - KG							
RESTRAINT		PALLET POSITION					
DIRECTION	NUMBER OPERABLE	31P	32P	33P	34P	41P	42P
Maximum Load		2449	2449	2449	2449	2449	2449
Vertical	16	2449					2449
	14 - 15	2449	2449	2449	2449		2449
	9 - 13	2449	2449	2449	2449	2449	2449
	8	0	0	0	0	0	0
Forward	3	2449	2449	2449	2449		2449
	2	2449	2449	2449	2449	2449	2449
	1	2449	2050	2050	2050	0	2050
	0	0	0	0	0	0	0
Aft	2 - 3	2449	2449	2449	2449	2449	2449
	1	2050	2050	2050	2050	2050	2449
	0	0	0	0	0	0	0
Left	5	2449		2449	2449		2449
	2 - 4	2449	2449	2449	2449	2449	2449
	1	0	0	0	0	0	0
Right	5	2449	2449				2449
	2 - 4	2449	2449	2449	2449	2449	2449
	1	0	0	0	0	0	0

APPLICABLE CONFIGURATIONS
All

BOEING PROPRIETARY
Export Controlled by ECCN 9E991

AFT COMPARTMENT UNIT LOAD DEVICE LOAD LIMITS (Continued)

Size Code Q Longitudinal

The following table shows the maximum allowable zone weights, in pounds, with missing or inoperative restraints:

MAXIMUM ALLOWABLE LOADS WITH MISSING / INOPERATIVE RESTRAINTS SIZE CODE Q LONGITUDINAL - LB							
RESTRAINT		PALLET POSITION					
DIRECTION	NUMBER OPERABLE	31P	32P	33P	34P	41P	42P
Maximum Load		5400	5400	5400	5400	5400	5400
Vertical	16	5400					5400
	14 - 15	5400[a]	5400	5400	5400		5400[a]
	4 - 13	5400[a]	5400[a]	5400[a]	5400[a]	5400[a]	5400[a]
	3	0	0	0	0	0	0
Forward	3	5400	5400	5400	5400		5400
	2	5400	5400	5400	5400	5400	5400
	1	5400	4520	4520	4520	0	4520
	0	0	0	0	0	0	0
Aft	2 - 3	5400	5400	5400	5400	5400	5400
	1	4520	4520	4520	4520	4520	5400
	0	0	0	0	0	0	0
Left	5	5400		5400	5400		5400
	2 - 4	5400	5400	5400	5400	5400	5400
	1	0	0	0	0	0	0
Right	5	5400	5400				5400
	2 - 4	5400	5400	5400	5400	5400	5400
	1	0	0	0	0	0	0

[a] All end vertical restraints (endstops, pallet locks, lateral guides) must be operable.

APPLICABLE CONFIGURATIONS
All

BOEING PROPRIETARY
Export Controlled by ECCN 9E991

AFT COMPARTMENT UNIT LOAD DEVICE LOAD LIMITS (Continued)

The following table shows the maximum allowable zone weights, in kilograms, with missing or inoperative restraints:

MAXIMUM ALLOWABLE LOADS WITH MISSING / INOPERATIVE RESTRAINTS SIZE CODE Q LONGITUDINAL - KG							
RESTRAINT		PALLET POSITION					
DIRECTION	NUMBER OPERABLE	31P	32P	33P	34P	41P	42P
Maximum Load		2449	2449	2449	2449	2449	2449
Vertical	16	2449					2449
	14 - 15	2449[a]	2449	2449	2449		2449[a]
	4 - 13	2449[a]	2449[a]	2449[a]	2449[a]	2449[a]	2449[a]
	3	0	0	0	0	0	0
Forward	3	2449	2449	2449	2449		2449
	2	2449	2449	2449	2449	2449	2449
	1	2449	2050	2050	2050	0	2050
	0	0	0	0	0	0	0
Aft	2 - 3	2449	2449	2449	2449	2449	2449
	1	2050	2050	2050	2050	2050	2449
	0	0	0	0	0	0	0
Left	5	2449		2449	2449		2449
	2 - 4	2449	2449	2449	2449	2449	2449
	1	0	0	0	0	0	0
Right	5	2449	2449				2449
	2 - 4	2449	2449	2449	2449	2449	2449
	1	0	0	0	0	0	0

[a] All end vertical restraints (endstops, pallet locks, lateral guides) must be operable.

APPLICABLE CONFIGURATIONS
All

BOEING PROPRIETARY
Export Controlled by ECCN 9E991

BARRIER NET

AFT AND BULK HOLDS

The barrier net separates the aft hold from the bulk hold. The barrier net's straps are used to restrain cargo between the two holds. An appreciable cut or damage to a strap, strap attachment fitting, or fitting stitching will result in the following compartment load restriction.

BARRIER NET DAMAGE	LOAD RESTRICTIONS	
	AFT HOLD	BULK HOLD
Two fully severed horizontal straps that are, 1) not adjacent 2) not severed between the same adjacent vertical straps	No Restriction	No Restriction
One vertical strap with a cut that is less than 0.3 inch across the strap and at least 1.0 inch away from attachment fitting stitching	No Restriction	No Restriction
Any number of horizontal straps with No Restriction No Restriction cuts that are less than 0.3 inch across the strap		
Superficial damage to attachment fittings not potentially affecting retention of the net (e.g., scratched paint)		
One vertical strap with a 0.3 inch or longer cut across the strap that is at least 1.0 inch away from attachment fitting stitching	Use certified ULDs only OR Limit aft hold to 0 LB OR Tie down uncertified ULDs and bulk cargo in the aft direction[a] OR See alternate restrictions below	No Restriction
One attachment fitting damaged, or No Restriction adjacent stitching damaged, potentially affecting retention of the net (e.g., bent fitting, broken spring, cut stitch)		
Two or more attachment fittings damaged, or adjacent stitching damaged, potentially affecting retention of the net (e.g., bent fitting, broken spring, cut stitch)	Use certified ULDs only OR Limit hold to 0 LB OR Tie down uncertified ULDs and bulk cargo in the aft direction[a] OR See alternate restrictions below	Limit hold to 0 LB OR Tie down bulk cargo in the forward direction[a] OR See alternate restrictions below
Two or more vertical straps with a 0.3 inch or longer cut across the strap		
Two or more adjacent horizontal straps, with 0.3 inch or longer cut across each strap, that are located between any two adjacent vertical straps		
Barrier net missing or inoperative		

[a] Refer to Weight and Balance Manual CHP-SEC 1-68-00x for tiedown information.

APPLICABLE CONFIGURATIONS
All

BOEING PROPRIETARY
Export Controlled by ECCN 9E991

BARRIER NET (Continued)

Alternative restrictions for when the Barrier Net is damaged or missing:

1. One full-width certified container must occupy the aft-most position of the aft hold with all restraints operable and engaged (e.g., no missing restraints). The container must be of a height and width sufficient to block the opening between the bulk hold and aft hold (e.g., one LD-6 is acceptable; one or two LD-3s are not acceptable).
2. Only certified ULDs, or ULDs tied down for the aft direction may occupy the other aft hold positions (refer to CHP-SEC 1-68-00x for tiedown information).
3. The combined weight of the aft-most certified ULD and cargo in the bulk hold does not exceed the weight limitation for the aft-most ULD position or the bulk hold, whichever is less.
4. It is recommended that the aft-most certified ULD's center of gravity is centered and as low as possible to minimize any offset loading effect from the bulk hold cargo.
5. It is recommended that all ULD positions forward of the aft-most certified ULD should be filled to help avoid in-flight center of gravity shifts (these additional ULDs can be empty).

APPLICABLE CONFIGURATIONS
All

BOEING PROPRIETARY
Export Controlled by ECCN 9E991

CARGO TIEDOWNS - LOWER DECK

GENERAL INFORMATION

A certified unit load device will not require tiedowns unless one of the following conditions exist:

- The unit load device contains cargo of such shape and/or densities as to pose a hazard to the airplane structure or systems. If so, the entire weight of the ULD and its cargo must be tied down.
- The unit load device is limited either by restraint configurations or by missing / inoperative restraints. If so, the weight in excess of the ULD load limit data in CHP-SEC 1-66-xxx, must be tied down.
- The unit load device is not specified in this manual. If so, the entire weight of the ULD and its cargo must be tied down.
- The unit load device does not satisfy the center of gravity limitations in CHP-SEC 1-63-xxx. If so, the entire weight of the ULD and its cargo must be tied down.

A non-certified unit load device will not require tiedowns unless one of the following conditions exist:

- The unit load device contains cargo of such shape and/or densities as to pose a hazard to the airplane structure or systems. If so, the entire weight of the ULD and its cargo must be tied down.
- The unit load device is limited either by restraint configurations or by missing / inoperative restraints. If so, the weight in excess of the ULD load limit data in CHP-SEC 1-66-xxx, must be tied down.
- The unit load device does not satisfy the center of gravity limitations in CHP-SEC 1-63-xxx. If so, the entire weight of the ULD and its cargo must be tied down.
- The unit load devices requiring tie downs other than vertical direction cannot be string loaded.
- The unit load device is not specified in this manual. If so, the entire weight of the ULD and its cargo must be tied down. These unit load devices cannot be string loaded.
- The unit load device is less than 63” in height. If so, the entire weight of the ULD and its cargo must be tied down.These unit load devices cannot be string loaded.
- The unit load device is not serviceable, not well constructed, or loaded in a manner that could result in it being a hazard to the airplane structure or systems. If so, the entire weight of the ULD and its cargo must be tied down.

Bulk cargo will not require tiedowns unless one of the following conditions exist:

- The bulk cargo is loaded on rollers, balls or devices to assist in moving cargo within the compartment.
- The bulk cargo is of shape or density that could become a hazard to the airplane structure or systems (e.g. dense or piercing items that could become projectiles).
- Bulk cargo movement within the compartment due to operational loads would cause a large change in airplane C.G.

Good judgment must be used in selecting the location and number of tiedowns to give sufficient safety margin for uneven strap and net stretch, strap and cargo slippage, and for varying allowables of rings used

APPLICABLE CONFIGURATIONS
All

BOEING PROPRIETARY
Export Controlled by ECCN 9E991

CARGO TIEDOWNS - LOWER DECK (Continued)

in combination. To prevent overloading of hardware, ring loops should be correctly oriented as closely as possible to the strap direction.

CAUTION DO NOT MIX DIFFERENT STIFFNESSES OF TIEDOWN STRAPS (FOR EXAMPLE, KEVLAR AND NYLON WEBS) WHEN RESTRAINING CARGO. MIXING STRAP STIFFNESSES MAY CAUSE PREMATURE FAILURE OF THE STIFFER STRAP. THE USE OF CHAINS FOR TIEDOWNS IS NOT RECOMMENDED.

APPLICABLE CONFIGURATIONS
All

BOEING PROPRIETARY
Export Controlled by ECCN 9E991

CARGO TIEDOWNS - LOWER DECK (Continued)

TIEDOWN ALLOWABLES

The following sections describe the basic tiedown requirements and provide the tiedown fitting load limits.

Tiedown Requirements

The required tiedown load for each basic direction forward, aft, side (both directions) and up is determined from the following equation:

$$L = LF \times W$$

Where,

L = The applied load for a given direction
LF = The applicable load factor (from the table below)
W = The weight of the cargo to be tied down

The following table provides the load factors used to determine the applied load.

LOCATION	LOAD FACTOR			
	FWD	AFT	SIDE	UP
Forward Compartment	1.50	1.50	0.75	1.50
Aft Compartment	1.50	1.50	1.34	2.30
Bulk Compartment	1.50	1.50	1.50	2.50

The total restraint capability (i.e. sum of the tiedown strap capabilities) in each of these five basic restraint directions must be equal to or greater than the computed applied load in that direction. The minimum allowable strap rating is 5000 LB (2267 KG).

CAUTION UNEVEN MASS DISTRIBUTION MUST BE ACCOUNTED FOR IN DETERMINING STRAP LOADS AND SELECTING TIEDOWN POINTS.

BOEING PROPRIETARY
Export Controlled by ECCN 9E991

CARGO TIEDOWNS - LOWER DECK (Continued)

Tiedown Fitting Load Limits

Utilizing Brown Line tiedown fittings P/N's 20050 and 10730, Ancra P/N's 40000 and 40340, or equivalent, the tiedown fitting load limits as a function of the floor angle (refer to the “Tiedown Calculation” section on page 6 of this subject for an illustration of floor angle) are summarized in the table below:

FLOOR ANGLE (DEGREES)	ALLOWABLE TENSION LOAD ON STRAP	
	LB	KG
0° (Horizontal)	2000	907
0° to 90°	Varies[a]	Varies[a]
90° (Vertical)	4000	1814

[a] Varies linearly between 2000 LB (907 KG) and 4000 LB (1814 KG).

The combined loading on any two laterally adjacent tiedown fittings must not exceed the limits noted in the above table.

The sum of the up components from all longitudinally adjacent tiedown fittings within a 21 IN. span must not exceed 4000 LB (1814 KG).

The allowable fitting load varies based on the restraint direction. To obtain the allowable fitting load in a given direction, divide the fitting load limit by the load factor for that direction.

APPLICABLE CONFIGURATIONS
All

BOEING PROPRIETARY
Export Controlled by ECCN 9E991

CARGO TIEDOWNS - LOWER DECK (Continued)

Tiedown Strap Orientation

The allowable orientation of the tiedown strap relative to the tiedown fitting is a function of the type of tiedown fitting. The following diagrams defines the strap orientation restrictions for the various tiedown fittings.

SIDE GUIDES, SILL ROLLERS, GUIDE ROLLERS AND THE BULK COMPARTMENT	CENTER OF BULK COMPARTMENT
The following figure illustrates allowable strap rotation about a vertical axis located at the center of the tiedown fitting. 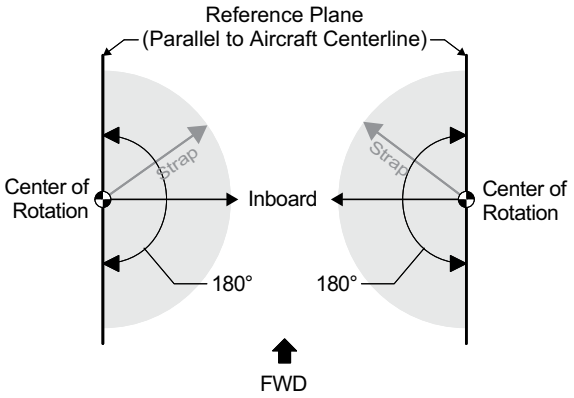 The shaded area shows the range of rotation of 180 degrees relative to a reference plane that is parallel to the centerline of the aircraft. The strap orientation must always be inboard of the reference plane.	The following figure illustrates allowable strap rotation about a vertical axis located at the center of the tiedown fitting. 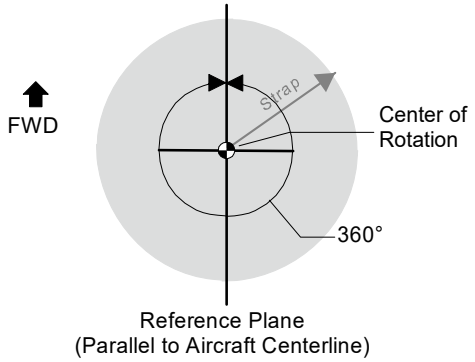 The shaded area shows the range of rotation of 360 degrees relative to a reference plane that is parallel to the centerline of the aircraft.

APPLICABLE CONFIGURATIONS
All

BOEING PROPRIETARY
Export Controlled by ECCN 9E991

CARGO TIEDOWNS - LOWER DECK (Continued)

FIXED END STOPS, PALLET LOCKS AND LATERAL GUIDES

The following figure illustrates allowable strap rotation about a vertical axis located at the center of the tie-down fitting.

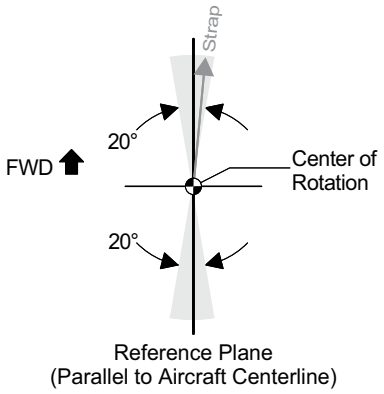

The shaded area shows the range of rotation of 20 degrees relative to a reference plane that is parallel to the centerline of the aircraft. The allowable range applied to straps oriented forward or aft of the tiedown fitting.

TIEDOWN CALCULATION

The following sections provide the methodology for determining the number of tiedown straps required for each of the basic restraint directions.

Tiedown fitting locations are provided in CHP-SEC 1-68-04x for the forward compartments, CHP-SEC 1-68-06x for the aft compartments, and CHP-SEC 1-68-08x for the bulk compartment.

APPLICABLE CONFIGURATIONS
All

BOEING PROPRIETARY
Export Controlled by ECCN 9E991

CARGO TIEDOWNS - LOWER DECK (Continued)

Tiedown Straps Required for Up Load

The following illustration and form provide a method for calculating the number of tiedown straps required for restraint in the up direction.

LOOKING FORWARD / AFT

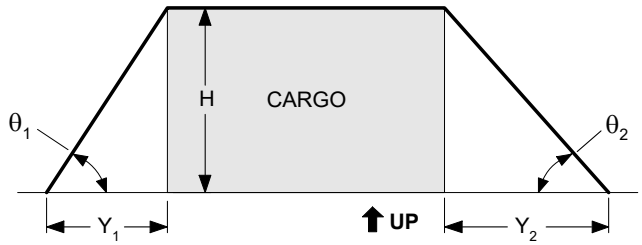

θ_{Floor} is equal to the smaller of the two angles, θ_1 and θ_2.

If floor angles cannot be determined directly, the following equations may be used to determine these angles:

$$\theta_1 = \tan^{-1}\left[\frac{H}{Y_1}\right] \quad \text{and} \quad \theta_2 = \tan^{-1}\left[\frac{H}{Y_2}\right]$$

Complete the following form to determine the number of tiedown straps required:

Floor Angle[a]	θ_{Floor} = _____ °	Up Load Factor[b]	ULF= _____
Cargo Weight (including tare)	W = _____ LB or _____ KG		
Restrained Weight (including tare)[c]	RL = _____ LB or _____ KG		
Unrestrained Load	P = (W - RL) x ULF	P = _____ LB or _____ KG	
Allowable Tiedown Load	AL = 2000 LB + 2000 LB x (θ_{Floor}/90°) AL = 907 KG + 907 KG x (θ_{Floor}/90°)	AL = _____ LB or _____ KG	
Allowable Load Up Direction	AL_Z = AL x sin(θ_{Floor})	AL_Z = _____ LB or _____ KG	
Number of Straps Required	N = P / (2 x AL_Z)	N = _____ Strap(s)	

[a] Floor angle, θ_{Floor} is equal to the smaller of θ_1 and θ_2.
[b] From the Load Factor Table in "Tiedown Allowables" section on page 3.
[c] Value of restrained weight from missing restraint tables (refer to CHP-SEC 1-66-xxx).

NOTE A minimum of two straps are required to restrain cargo in the up direction. If N is not a whole number, it must be rounded to the next higher integer value (e.g. if N is calculated to be 2.3, the required number of straps is 3).

APPLICABLE CONFIGURATIONS
All

BOEING PROPRIETARY
Export Controlled by ECCN 9E991

CARGO TIEDOWNS - LOWER DECK (Continued)

Tiedown Straps Required for Side Load

The following illustration and form provide a method for calculating the number of tiedown straps required for restraint in the side directions.

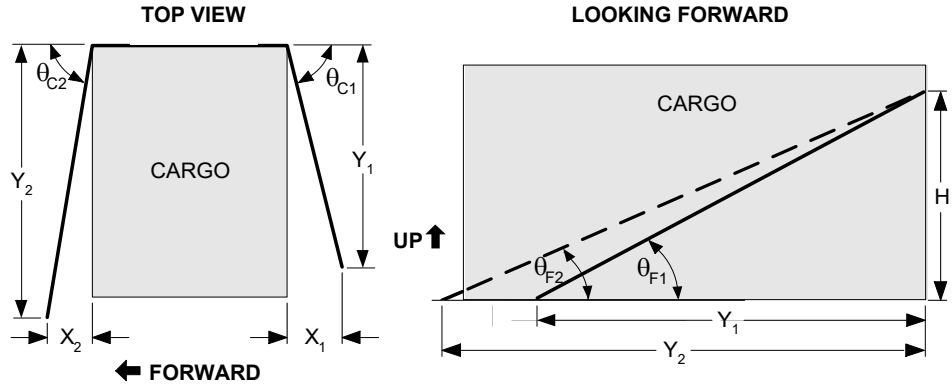

θ_{C1} and θ_{C2} are Center Line angles

θ_{F1} and θ_{F2} are Floor angles

If angles cannot be determined directly, use the following equations for calculation:

$$\theta_{F1} = \tan^{-1}\left[\frac{H}{Y_1}\right] \qquad \theta_{F2} = \tan^{-1}\left[\frac{H}{Y_2}\right] \qquad \theta_{C1} = \tan^{-1}\left[\frac{Y_1}{X_1}\right] \qquad \theta_{C2} = \tan^{-1}\left[\frac{Y_2}{X_2}\right]$$

Complete the following form to determine the number of tiedown straps required. Perform calculations twice: once using θ_{F1} and θ_{C1} as floor and centerline angles, then using θ_{F2} and θ_{C2}. Use the higher number of straps.

Floor Angle[a]	θ_{Floor} = _____°	Side Load Factor[b]	SLF= _____
Centerline Angle[c]	θ_{Center}=_____°		
Cargo Weight (including tare)	W = _____ LB or _____ KG		
Restrained Load (including tare)[d]	RL = _____ LB or _____ KG		
Unrestrained Load	P = (W - RL) x SLF	P = _____ LB or _____ KG	
Allowable Tiedown Load	AL = 2000 LB + 2000 LB x (θ_{Floor}/90°) AL = 907 KG + 907 KG x (θ_{Floor}/90°)	AL = _____ LB or _____ KG	
Allowable Load Side Direction	AL_Y = AL x [cos(θ_{Floor}) x sin(θ_{Center})]	AL_Y = _____ LB or _____ KG	
Number of Straps Required	N = P / (2 x AL_Y)	N = _____ Strap(s)	

[a] $\theta_{Floor} = \theta_{F1}$ or θ_{F2}.
[b] From the Load Factor Table in "Tiedown Allowables" section on page 3.
[c] $\theta_{Center} = \theta_{C1}$ or θ_{C2}.
[d] Value of restrained weight from missing restraint tables (refer to CHP-SEC 1-66-xxx).

NOTE A minimum of one strap is required to restrain cargo for each side restraint. If N is not a whole number, it must be rounded to the next higher integer value (e.g. if N is calculated to be 2.3, the required number of straps is 3).

APPLICABLE CONFIGURATIONS
All

BOEING PROPRIETARY
Export Controlled by ECCN 9E991

CARGO TIEDOWNS - LOWER DECK (Continued)

Tiedown Straps Required for Forward/Aft Load

The following illustration and form provide a method for calculating the number of tiedown straps required for restraint in the forward/aft directions.

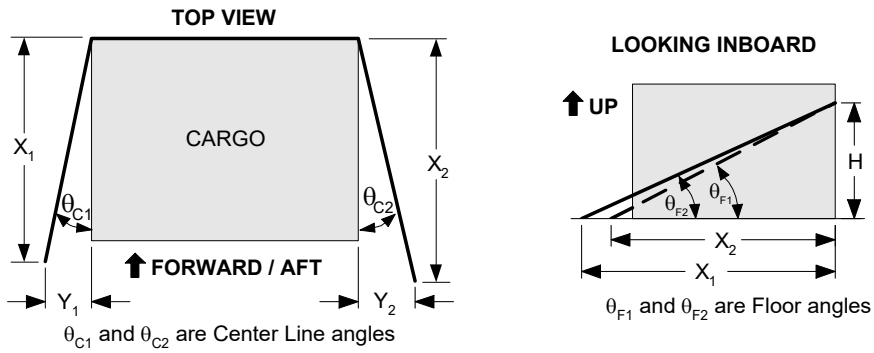

If angles cannot be determined directly, use the following equations for calculation:

$$\theta_{F1} = \tan^{-1}\left[\frac{H}{X_2}\right] \qquad \theta_{F2} = \tan^{-1}\left[\frac{H}{X_1}\right] \qquad \theta_{C1} = \tan^{-1}\left[\frac{Y_1}{X_1}\right] \qquad \theta_{C2} = \tan^{-1}\left[\frac{Y_2}{X_2}\right]$$

Complete the following form to determine the number of tiedown straps required. Perform calculations twice: once using θ_{F1} and θ_{C1} as floor and centerline angles, then using θ_{F2} and θ_{C2}. Use the higher number of straps.

Floor Angle[a]	θ_{Floor} = _____°	Forward/Aft Load Factor[b]	FALF=_____
Centerline Angle[c]	θ_{Center}=_____°		
Cargo Weight (including tare)	W = _____ LB or _____ KG		
Restrained Load (including tare)[d]	RL = _____ LB or _____ KG		
Unrestrained Load	P = (W - RL) x FALF	P = _____ LB or _____ KG	
Allowable Tiedown Load	AL = 2000 LB + 2000 LB x (θ_{Floor}/90°) AL = 907 KG + 907 KG x (θ_{Floor}/90°)	AL = _____ LB or _____ KG	
Allowable Load Fwd/Aft Direction	AL_X = AL x [cos(θ_{Floor}) x cos(θ_{Center})]	AL_X = _____ LB or _____ KG	
Number of Straps Required	N = P / (2 x AL_X)	N = _____ Strap(s)	

[a] $\theta_{Floor} = \theta_{F1}$ or θ_{F2}.
[b] From the Load Factor Table in "Tiedown Allowables" section on page 3.
[c] $\theta_{Center} = \theta_{C1}$ or θ_{C2}.
[d] Value of restrained weight from missing restraint tables (refer to CHP-SEC 1-66-xxx).

NOTE A minimum of one strap is required to restrain cargo in the forward/aft direction. If N is not a whole number, it must be rounded to the next higher integer value (e.g. if N is calculated to be 2.3, the required number of straps is 3).

APPLICABLE CONFIGURATIONS
All

BOEING PROPRIETARY
Export Controlled by ECCN 9E991

CARGO TIEDOWNS - LOWER DECK (Continued)

TIEDOWN EXAMPLE

This section provides two tiedown examples. The first example shows the determination of the number of straps required for each of the five basic restraint directions. The second example demonstrates a calculation of tiedown requirements for a missing restraint condition.

Example 1

In the following example, a Size Code A (88 x 125 inch) pallet is loaded to 13500 LB (6123 KG), and will be carried in position 25P. The maximum weight allowed in this position with all restraints operative is 11250 LB (5102 KG) without tiedowns and 15300 LB (6939 KG) with tiedowns. Refer to CHP-SEC 1-60-2xx for forward compartment capabilities. The example pallet can be carried in this position, but the weight in excess of 11250 LB (5102 KG) must be restrained with tiedowns. The strap lengths used to solve this problem are shown below.

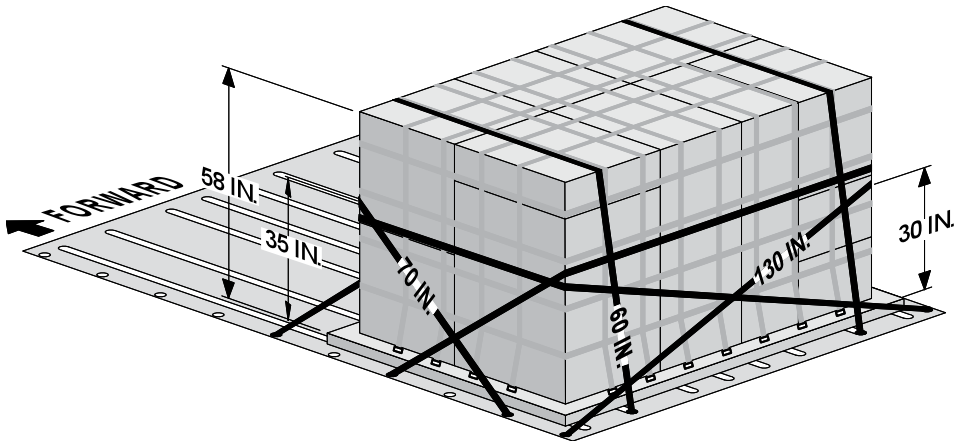

NOTE When a pallet weight exceeds the maximum allowed with all restraints operative, a minimum of six straps are required for tiedown.

APPLICABLE CONFIGURATIONS
All

BOEING PROPRIETARY
Export Controlled by ECCN 9E991

CARGO TIEDOWNS - LOWER DECK (Continued)

Determination of the number of straps required for up load restraint:

LOOKING FORWARD / AFT

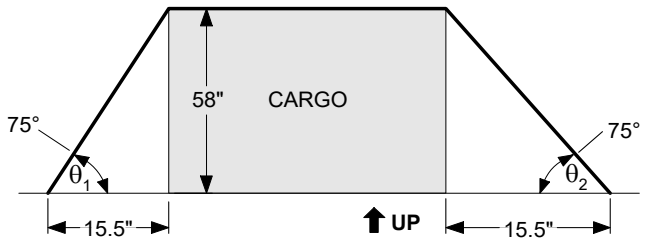

Fwd/Aft and Side straps omitted for clarity.

Floor Angle[a]	θ_{Floor}= **75°**		Up Load Factor[b]	ULF=	**1.50**		
Cargo Weight (including tare)			W =	**13500**	LB	or	**6123** KG
Restrained Weight (including tare)[c]			RL =	**11250**	LB	or	**5102** KG
Unrestrained Load	P = (W - RL) x ULF		P =	**3375**	LB	or	**1532** KG
Allowable Tiedown Load	AL = 2000 LB + 2000 LB x (θ_{Floor}/90°) AL = 907 KG + 907 KG x (θ_{Floor}/90°)		AL =	**3666**	LB	or	**1662** KG
Allowable Load Up Direction	AL_Z = AL x sin(θ_{Floor})		AL_Z =	**3541**	LB	or	**1605** KG
Number of Straps Required		N = P / (2 x AL_Z)	N =	**0.48 → 2**	Strap(s)		

[a] Floor angle, θ_{Floor} is equal to the smaller of θ_1 and θ_2.
[b] From the Load Factor Table in "Tiedown Allowables" section on page 3.
[c] Value of restrained weight from missing restraint tables (refer to CHP-SEC 1-66-xxx).

NOTE The Up Load Factor in the aft hold is 2.30 and 2.50 in the bulk hold.

NOTE A minimum of two straps are required to restrain cargo in the up direction.

APPLICABLE CONFIGURATIONS
All

BOEING PROPRIETARY
Export Controlled by ECCN 9E991

CARGO TIEDOWNS - LOWER DECK (Continued)

Determination of the number of straps required for side load restraint:

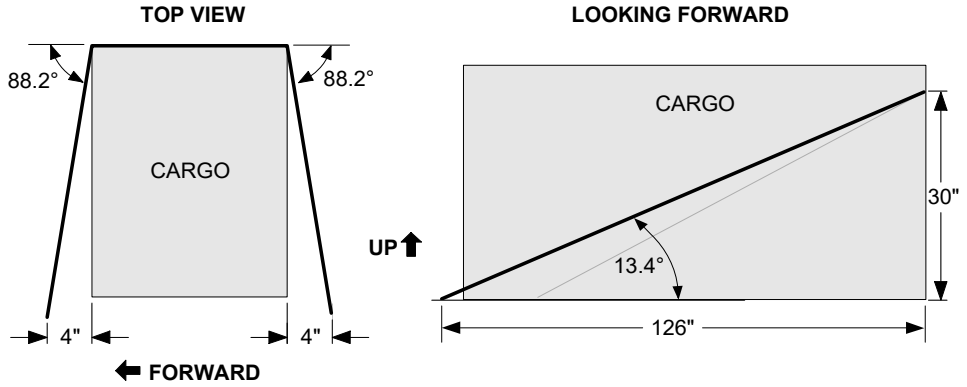

Fwd/Aft and Up straps omitted for clarity.

Floor Angle[a]	θ_{Floor}= **13.4°**		Side Load Factor[b]	SLF=	**0.75**	
Centerline Angle[c]	θ_{Center}= **88.2°**					
Cargo Weight (including tare)			W =	**13500** LB	or	**6123** KG
Restrained Load (including tare)[d]			RL =	**11250** LB	or	**5102** KG
Unrestrained Load	P = (W - RL) x SLF		P =	**1688** LB	or	**766** KG
Allowable Tiedown Load	AL = 2000 LB + 2000 LB x (θ_{Floor}/90°) AL = 907 KG + 907 KG x (θ_{Floor}/90°)		AL =	**2297** LB	or	**1042** KG
Allowable Load Side Direction	AL_Y = AL x [cos(θ_{Floor}) x sin(θ_{Center})]		AL_Y =	**2233** LB	or	**1013** KG
Number of Straps Required		N = P / (2 x AL_Y)		N = **0.38 → 1** Strap(s)		

[a] $\theta_{Floor} = \theta_{F1}$ or θ_{F2}.
[b] From the Load Factor Table in "Tiedown Allowables" section on page 3.
[c] $\theta_{Center} = \theta_{C1}$ or θ_{C2}.
[d] Value of restrained weight from missing restraint tables (refer to CHP-SEC 1-66-xxx).

NOTE The Side Load Factor in the aft hold is 1.34 and 1.50 in the bulk hold.

APPLICABLE CONFIGURATIONS
All

BOEING PROPRIETARY
Export Controlled by ECCN 9E991

CARGO TIEDOWNS - LOWER DECK (Continued)

Determination of the number of straps required for forward / aft load restraint:

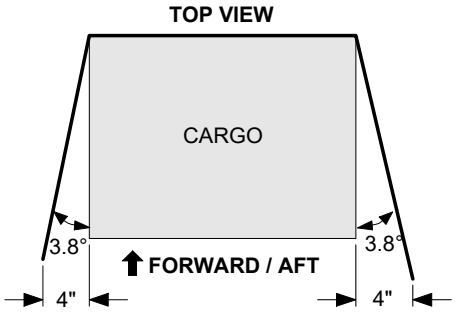

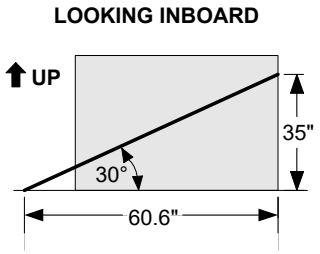

Side and up straps omitted for clarity.

Floor Angle[a]	θ_{Floor} = 30°		Forward/Aft Load Factor[b]	FALF= 1.50		
Centerline Angle[c]	θ_{Center}= 3.8°					
Cargo Weight (including tare)			W = 13500 LB	or	6123 KG	
Restrained Load (including tare)[d]			RL = 11250 LB	or	5102 KG	
Unrestrained Load	P = (W - RL) x FALF		P = 3375 LB	or	1532 KG	
Allowable Tiedown Load	AL = 2000 LB + 2000 LB x (θ_{Floor}/90°) AL = 907 KG + 907 KG x (θ_{Floor}/90°)		AL = 2666 LB	or	1209 KG	
Allowable Load Fwd/Aft Direction	AL_X = AL x [cos(θ_{Floor}) x cos(θ_{Center})]		AL_X = 2303 LB	or	1044 KG	
Number of Straps Required		N = P / (2 x AL_X)	N = 0.73 → 1 Strap(s)			

[a] $\theta_{Floor} = \theta_{F1}$ or θ_{F2}.
[b] From the Load Factor Table in "Tiedown Allowables" section on page 3.
[c] $\theta_{Center} = \theta_{C1}$ or θ_{C2}.
[d] Value of restrained weight from missing restraint tables (refer to CHP-SEC 1-66-xxx).

APPLICABLE CONFIGURATIONS
All

BOEING PROPRIETARY
Export Controlled by ECCN 9E991

CARGO TIEDOWNS - LOWER DECK (Continued)

Example 2

In this example, a Size Code A (88 x 125 inch) pallet is loaded to 10000 LB (4536 KG), and will be carried in position 25P. Furthermore, two endstops located at the forward end of the pallet are missing or inoperative. As a result, the remaining restraint hardware capability is reduced to 5620 LB (2549 KG) in the forward direction. Restraint hardware for the other directions can restrain the entire 10000 LB (4536 KG). Refer to CHP-SEC 1-66-2xx for forward compartment missing / inoperative restraint capabilities. Thus, the pallet can be carried in this position, but the weight in excess of 5620 LB (2549 KG) must be restrained with tiedowns in the forward direction. For this example, there are fourteen available vertical restraints, therefore; no vertical tie down is necessary. The strap lengths used to solve this problem are shown below.

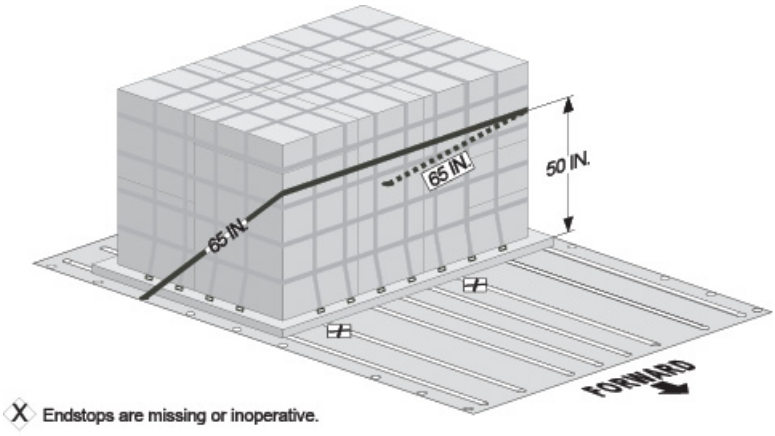

CAUTION CARE SHOULD BE TAKEN TO PREVENT STRAPS FROM “WALKING DOWN” AS CARGO SHIFTS IN FLIGHT.

APPLICABLE CONFIGURATIONS
All

BOEING PROPRIETARY
Export Controlled by ECCN 9E991

CARGO TIEDOWNS - LOWER DECK (Continued)

Determination of the number of straps required for forward / aft load restraint:

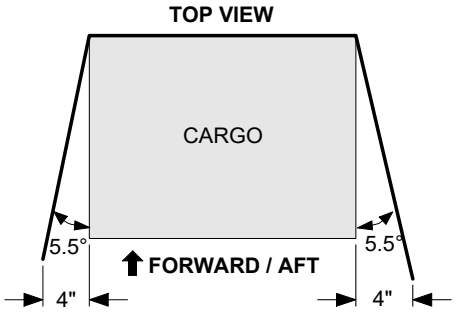

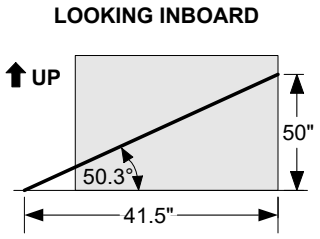

Side and up straps omitted for clarity.

Floor Angle[a]	θ_{Floor} = **50.3°**	Forward/Aft Load Factor[b]	FALF= **1.50**		
Centerline Angle[c]	θ_{Center}= **5.5°**				
Cargo Weight (including tare)		W =	**10000** LB	or	**4536** KG
Restrained Load (including tare)[d]		RL =	**5620** LB	or	**2549** KG
Unrestrained Load	P = (W - RL) x FALF	P =	**6570** LB	or	**2980** KG
Allowable Tiedown Load	AL = 2000 LB + 2000 LB x (θ_{Floor}/90°) AL = 907 KG + 907 KG x (θ_{Floor}/90°)	AL =	**3117** LB	or	**1413** KG
Allowable Load Fwd/Aft Direction	AL_X = AL x [cos(θ_{Floor}) x cos(θ_{Center})]	AL_X =	**1981** LB	or	**898** KG
Number of Straps Required	N = P / (2 x AL_X)	N =	**1.66 → 2** Strap(s)		

[a] $\theta_{Floor} = \theta_{F1}$ or θ_{F2}.
[b] From the Load Factor Table in "Tiedown Allowables" section on page 3.
[c] $\theta_{Center} = \theta_{C1}$ or θ_{C2}.
[d] Value of restrained weight from missing restraint tables (refer to CHP-SEC 1-66-xxx).

APPLICABLE CONFIGURATIONS
All

BOEING PROPRIETARY
Export Controlled by ECCN 9E991

TIEDOWN FITTING LOCATIONS - FORWARD COMPARTMENTS

FITTING LOCATIONS

The following illustration shows the layout of tiedown fittings in the forward compartment.

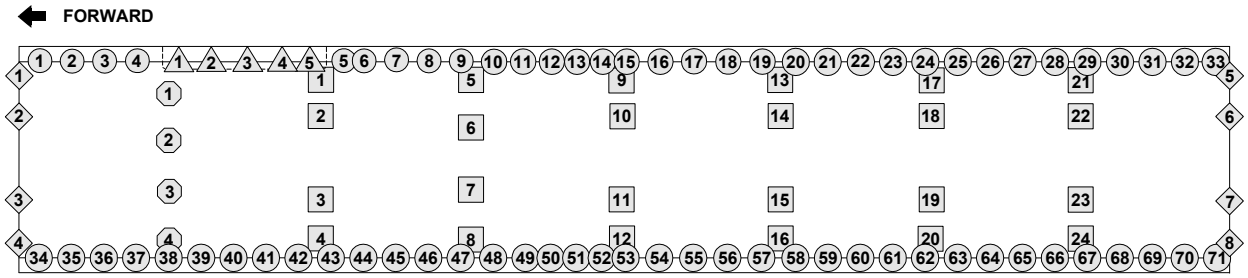

The following tables provide the locations for each tiedown fitting in the forward compartment.

	NO.	B.A. IN.	B.B.L. IN.	W.L. IN.
Side Guide	1	213.9	+65.4	127.3
	2	234.9	+65.4	127.3
	3	255.9	+65.4	127.3
	4	276.9	+65.4	127.3
	5	411.6	+65.4	127.3
	6	423.9	+65.4	127.3
	7	444.9	+65.4	127.3
	8	465.9	+65.4	127.3
	9	486.9	+65.4	127.3
	10	507.9	+65.4	127.3
	11	529.1	+65.4	127.3
	12	545.4	+65.4	127.3
	13	561.9	+65.4	127.3
	14	578.4	+65.4	127.3
	15	593.9	+65.4	127.3
	16	614.9	+65.4	127.3
	17	635.9	+65.4	127.3
	18	656.9	+65.4	127.3

	NO.	B.A. IN.	B.B.L. IN.	W.L. IN.
Side Guide (Continued)	19	677.9	+65.4	127.3
	20	699.0	+65.4	127.3
	21	719.9	+65.4	127.3
	22	740.9	+65.4	127.3
	23	761.9	+65.4	127.3
	24	782.9	+65.4	127.3
	25	803.9	+65.4	127.3
	26	824.9	+65.4	127.3
	27	845.9	+65.4	127.3
	28	866.9	+65.4	127.3
	29	887.9	+65.4	127.3
	30	908.9	+65.4	127.3
	31	929.9	+65.4	127.3
	32	950.9	+65.4	127.3
	33	971.9	+65.4	127.3
	34	213.9	-65.4	127.3
	35	234.9	-65.4	127.3
	36	255.9	-65.4	127.3

	NO.	B.A. IN.	B.B.L. IN.	W.L. IN.
Side Guide (Continued)	37	276.9	-65.4	127.3
	38	297.9	-65.4	127.3
	39	318.9	-65.4	127.3
	40	339.9	-65.4	127.3
	41	360.9	-65.4	127.3
	42	381.9	-65.4	127.3
	43	402.9	-65.4	127.3
	44	423.9	-65.4	127.3
	45	444.9	-65.4	127.3
	46	465.9	-65.4	127.3
	47	486.9	-65.4	127.3
	48	507.9	-65.4	127.3
	49	529.1	-65.4	127.3
	50	545.4	-65.4	127.3
	51	561.9	-65.4	127.3
	52	578.4	-65.4	127.3
	53	593.9	-65.4	127.3
	54	614.9	-65.4	127.3

APPLICABLE CONFIGURATIONS
All

BOEING PROPRIETARY
Export Controlled by ECCN 9E991

TIEDOWN FITTING LOCATIONS - FORWARD COMPARTMENTS (Continued)

○	NO.	B.A. IN.	B.B.L. IN.	W.L. IN.
Side Guide (Continued)	55	635.9	-65.4	127.3
	56	656.9	-65.4	127.3
	57	677.9	-65.4	127.3
	58	698.9	-65.4	127.3
	59	719.9	-65.4	127.3
	60	740.9	-65.4	127.3
	61	761.9	-65.4	127.3
	62	782.9	-65.4	127.3
	63	803.9	-65.4	127.3
	64	824.9	-65.4	127.3
	65	845.9	-65.4	127.3
	66	866.9	-65.4	127.3
	67	887.9	-65.4	127.3
	68	908.9	-65.4	127.3
	69	929.9	-65.4	127.3
	70	950.9	-65.4	127.3
	71	971.9	-65.4	127.3

◇	NO.	B.A. IN.	B.B.L. IN.	W.L. IN.
Endstop	1	201.0	+41.5	126.4
	2	201.0	+19.5	126.4
	3	201.0	-19.5	126.4
	4	201.0	-41.5	126.4
	5	981.4	+41.5	126.4
	6	981.4	+19.5	126.4
	7	981.4	-19.5	126.4
	8	981.4	-41.5	126.4

△	NO.	B.A. IN.	B.B.L. IN.	W.L. IN.
Sill Roller	1	304.6	+60.2	123.2
	2	325.7	+60.2	123.2
	3	349.0	+60.2	123.2
	4	371.5	+60.2	123.2
	5	389.5	+60.2	123.2

□	NO.	B.A. IN.	B.B.L. IN.	W.L. IN.
Pallet Lock	1	396.7	+41.5	126.4
	2	396.7	+19.5	126.4
	3	396.7	-19.5	126.4
	4	396.7	-41.5	126.4
	5	494.4	+45.7	126.3
	6	494.4	+15.2	126.3
	7	494.4	-15.2	126.3
	8	494.4	-45.7	126.3
	9	592.1	+41.5	126.3
	10	592.1	+19.5	126.3
	11	592.1	-19.5	126.3
	12	592.1	-41.5	126.3
	13	689.7	+41.5	126.3

□	NO.	B.A. IN.	B.B.L. IN.	W.L. IN.
Pallet Lock (Continued)	14	689.7	+19.5	126.3
	15	689.7	-19.5	126.3
	16	689.7	-41.5	126.3
	17	787.4	+41.5	126.3
	18	787.4	+19.5	126.3
	19	787.4	-19.5	126.3
	20	787.4	-41.5	126.3
	21	885.1	+41.5	126.3
	22	885.1	+19.5	126.3
	23	885.1	-19.5	126.3
	24	885.1	-41.5	126.3

⬡	no.	B.A. in.	B.B.L. in.	W.L. IN.
Lateral Guide	1	298.2	+37.2	126.3
	2	298.2	+10.9	126.3
	3	298.2	-15.6	126.3
	4	298.2	-44.5	126.3

APPLICABLE CONFIGURATIONS
All

BOEING PROPRIETARY
Export Controlled by ECCN 9E991

TIEDOWN FITTING LOCATIONS - AFT COMPARTMENTS

FITTING LOCATIONS

The following illustration shows the layout of tiedown fittings in the aft compartment.

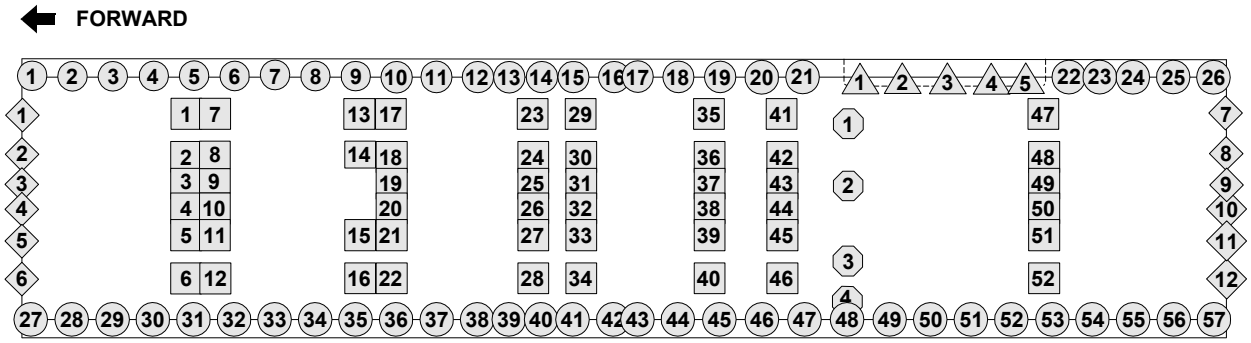

The following tables provide the locations for each tiedown fitting in the aft compartment.

○	NO.	B.A. IN.	B.B.L. IN.	W.L. IN.
Side Guide	1	1454.9	+65.4	127.3
	2	1475.9	+65.4	127.3
	3	1496.9	+65.4	127.3
	4	1517.9	+65.4	127.3
	5	1538.9	+65.4	127.3
	6	1559.9	+65.4	127.3
	7	1580.9	+65.4	127.3
	8	1601.9	+65.4	127.3
	9	1622.9	+65.4	127.3
	10	1643.9	+65.4	127.3
	11	1664.9	+65.4	127.3
	12	1686.1	+65.4	127.3
	13	1702.4	+65.4	127.3
	14	1718.9	+65.4	127.3
	15	1735.4	+65.4	127.3
	16	1756.4	+65.4	127.3
	17	1768.9	+65.4	127.3
	18	1789.9	+65.4	127.3
	19	1810.9	+65.4	127.3

○	NO.	B.A. IN.	B.B.L. IN.	W.L. IN.
Side Guide (Continued)	20	1831.9	+65.4	127.3
	21	1852.9	+65.4	127.3
	22	1988.3	+65.4	127.3
	23	1999.9	+65.4	127.3
	24	2020.9	+65.4	127.3
	25	2041.9	+65.4	127.3
	26	2062.8	+65.4	127.3
	27	1454.9	-65.4	127.3
	28	1475.9	-65.4	127.3
	29	1496.9	-65.4	127.3
	30	1517.9	-65.4	127.3
	31	1538.9	-65.4	127.3
	32	1559.9	-65.4	127.3
	33	1580.9	-65.4	127.3
	34	1601.9	-65.4	127.3
	35	1622.9	-65.4	127.3
	36	1643.9	-65.4	127.3
	37	1664.9	-65.4	127.3
	38	1686.1	-65.4	127.3

○	NO.	B.A. IN.	B.B.L. IN.	W.L. IN.
Side Guide (Continued)	39	1702.4	-65.4	127.3
	40	1718.9	-65.4	127.3
	41	1735.4	-65.4	127.3
	42	1756.4	-65.4	127.3
	43	1768.9	-65.4	127.3
	44	1789.9	-65.4	127.3
	45	1810.9	-65.4	127.3
	46	1831.9	-65.4	127.3
	47	1852.9	-65.4	127.3
	48	1873.9	-65.4	127.3
	49	1894.9	-65.4	127.3
	50	1915.9	-65.4	127.3
	51	1936.9	-65.4	127.3
	52	1957.9	-65.4	127.3
	53	1978.9	-65.4	127.3
	54	1999.9	-65.4	127.3
	55	2020.9	-65.4	127.3
	56	2041.9	-65.4	127.3
	57	2062.8	-65.4	127.3

APPLICABLE CONFIGURATIONS
All

BOEING PROPRIETARY
Export Controlled by ECCN 9E991

TIEDOWN FITTING LOCATIONS - AFT COMPARTMENTS (Continued)

◇	NO.	B.A. IN.	B.B.L. IN.	W.L. IN.
Endstop	1	1453.1	+41.5	123.9
	2	1453.1	+19.5	123.9
	3	1453.1	+6.5	123.9
	4	1453.1	-6.5	123.9
	5	1453.1	-19.5	123.9
	6	1453.1	-41.5	123.9
	7	2069.0	+41.5	126.4
	8	2069.0	+19.5	126.4
	9	2069.0	+6.5	126.4
	10	2069.0	-6.5	126.4
	11	2069.0	-19.5	126.4
	12	2069.0	-41.5	126.4

△	NO.	B.A. IN.	B.B.L. IN.	W.L. IN.
Sill Roller	1	1880.6	+60.2	123.2
	2	1901.6	+60.2	123.2
	3	1925.0	+60.2	123.2
	4	1947.5	+60.2	123.2
	5	1965.4	+60.2	123.2

⬡	no.	B.A. in.	B.B.L. in.	W.L. IN.
Lateral Guide	1	1874.5	+29.6	124.5
	2	1874.5	+4.6	124.5
	3	1874.5	-25.9	124.5
	4	1874.5	-51.1	124.5

▢	NO.	B.A. IN.	B.B.L. IN.	W.L. IN.
Pallet Lock	1	1538.1	+41.5	126.3
	2	1538.1	+19.5	126.3
	3	1538.1	+6.5	126.3
	4	1538.1	-6.5	126.3
	5	1538.1	-19.5	126.3
	6	1538.1	-41.5	126.3
	7	1546.1	+41.5	126.3
	8	1546.1	+19.5	126.3
	9	1546.1	+6.5	126.3
	10	1546.1	-6.5	126.3
	11	1546.1	-19.5	126.3
	12	1546.1	-41.5	126.3
	13	1626.6	+41.5	124.1
	14	1626.6	+19.5	124.1
	15	1626.6	-19.5	124.1
	16	1626.6	-41.5	124.1
	17	1642.6	+41.5	124.1
	18	1642.6	+19.5	124.1
	19	1642.6	+6.5	124.1
	20	1642.6	-6.5	124.1
	21	1642.6	-19.5	124.1
	22	1642.6	-41.5	124.1
	23	1716.3	+41.5	124.1
	24	1716.3	+19.5	124.1
	25	1716.3	+6.5	124.1
	26	1716.3	-6.5	124.1

▢	NO.	B.A. IN.	B.B.L. IN.	W.L. IN.
Pallet Lock (Continued)	27	1716.3	-19.5	124.1
	28	1716.3	-41.5	124.1
	29	1740.3	+41.5	124.1
	30	1740.3	+19.5	124.1
	31	1740.3	+6.5	124.1
	32	1740.3	-6.5	124.1
	33	1740.3	-19.5	124.1
	34	1740.3	-41.5	124.1
	35	1806.7	+41.5	126.3
	36	1806.7	+19.5	126.3
	37	1806.7	+6.5	126.3
	38	1806.7	-6.5	126.3
	39	1806.7	-19.5	126.3
	40	1806.7	-41.5	126.3
	41[a]	1842.8	+41.5	123.8
	42[a]	1842.8	+19.5	123.8
	43[a]	1842.8	+6.5	123.8
	44[a]	1842.8	-6.5	123.8
	45[a]	1842.8	-19.5	123.8
	46[a]	1842.8	-41.5	123.8
	47	1972.7	+41.5	126.4
	48	1972.7	+19.5	126.4
	49	1972.7	+6.5	126.4
	50	1972.7	-6.5	126.4
	51	1972.7	-19.5	126.4
	52	1972.7	-41.5	126.4

[a] Tiedown fittings located at B.A. 1842.8 are not to be used when partial load stops at B.A. 1813.4 are active in restraining ULDs.

APPLICABLE CONFIGURATIONS
All

BOEING PROPRIETARY
Export Controlled by ECCN 9E991

TIEDOWN FITTING LOCATIONS - BULK COMPARTMENT

FITTING LOCATIONS

The following illustration shows the layout of tiedown fittings in the bulk compartment.

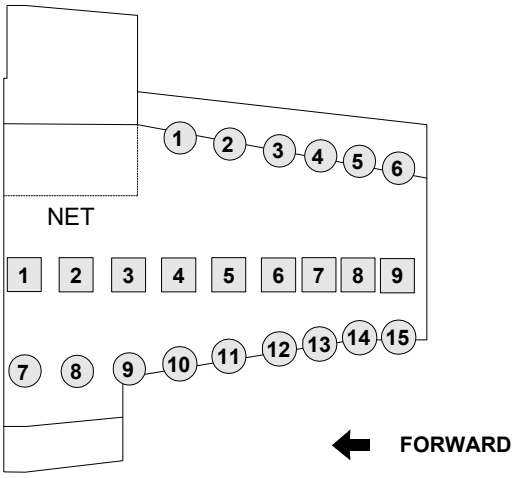

The following tables provide the locations for each tiedown fitting in the bulk compartment.

□	NO.	B.A. IN.	B.B.L. IN.	W.L. IN.
Center Tiedowns	1	2082.1	-0.7	124.9
	2	2104.0	-0.7	127.5
	3	2126.0	-0.7	130.1
	4	2147.0	-0.7	132.7
	5	2168.0	-0.7	135.3
	6	2189.0	-0.7	137.9
	7	2206.0	-0.7	140.0
	8	2222.5	-0.7	142.1
	9	2239.0	-0.7	144.1

○	NO.	B.A. IN.	B.B.L. IN.	W.L. IN.
Side Tiedowns	1	2147.0	+56.9	133.0
	2	2168.0	+54.5	135.6
	3	2189.0	+51.6	138.2
	4	2206.0	+49.3	140.4
	5	2222.5	+47.0	142.4
	6	2239.0	+44.1	144.4
	7	2082.1	-41.5	124.9
	8	2104.0	-41.2	127.5
	9	2126.0	-40.2	130.1

○	NO.	B.A. IN.	B.B.L. IN.	W.L. IN.
Side Tiedowns (Continued)	10	2147.0	-37.4	132.7
	11	2168.0	-34.4	135.3
	12	2189.0	-31.4	137.9
	13	2206.0	-29.1	140.0
	14	2222.5	-26.7	142.1
	15	2239.0	-26.6	144.1

NOTE Cargo door net fittings are not to be used for cargo tiedown.

APPLICABLE CONFIGURATIONS
All

BOEING PROPRIETARY
Export Controlled by ECCN 9E991

CARGO LATERAL IMBALANCE CONTROL

PROCEDURE FOR CALCULATION OF IMBALANCE

Procedures in this section show how to increase the allowable airplane Taxi Weight by controlling the cargo lateral imbalance. Cargo lateral imbalance is one component of the total airplane lateral imbalance. Refer to CHP-SEC 1-04-xxx for the Airplane Lateral Imbalance Limitations for the full range of airplane operations.

Occurrence

Cargo lateral imbalance occurs when the Center of Gravity of the cargo loaded is offset to the right or left of the airplane centerline. Note that this condition does not affect the longitudinal Center of Gravity which is measured as a percent of Mean Aerodynamic Chord (MAC).

Measurement

Cargo lateral imbalance is measured by the cargo lateral imbalance moment (CLIM) of the total cargo load. It is the responsibility of the operator to determine the cargo lateral imbalance moment. CLIM is determined as follows:

1. Determine the actual body buttock line (B.B.L.) for each loaded ULD based on the operator's loading practices. The actual B.B.L. must be within the allowable B.B.L. shown in the following table for the type of ULD loaded. Actual buttock lines to the left of the airplane centering are negative and buttock lines to the right of the airplane centering are positive.
2. Calculate the CLIM for each ULD using the following equation:

$$\text{CLIM} = \text{Cargo Weight in Pounds (Kilograms)} \times \text{Actual B.B.L. in Inches}$$

3. Calculate the NET CLIM by summing the CLIM for each ULD:

$$\text{NET CLIM} = \sum \text{CLIM (for each ULD)}$$

4. Determine the allowable taxi weight using the calculated NET CLIM and the procedures outlined in CHP-SEC 1-04-xxx.

APPLICABLE CONFIGURATIONS
A, B, C, E, F

BOEING PROPRIETARY
Export Controlled by ECCN 9E991

CARGO LATERAL IMBALANCE CONTROL (Continued)

Allowable B.B.L.'s for cargo loaded into unit load devices are shown in the following table.

UNIT LOAD DEVICE LATERAL CENTER OF GRAVITY RANGE					
SIZE CODE	COMMON NAME	ORIENTATION REAR VIEW	ALLOWABLE LATERAL C.G.		
			LEFTMOST B.B.L. - IN.	NOMINAL B.B.L. - IN.	RIGHTMOST B.B.L. - IN.
A	P1 LD-7 LD-9		-12.5	0.0	+12.5
K	LD-1	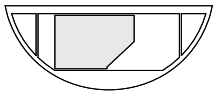	-38.1	-31.9	-25.7
		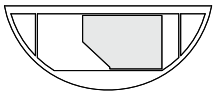	+25.7	+31.9	+38.1
	LD-3	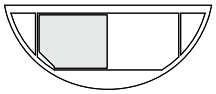	-38.1	-31.9	-25.7
		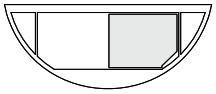	+25.7	+31.9	+38.1
	LD-3-45	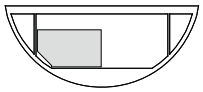	-38.1	-31.9	-25.7
		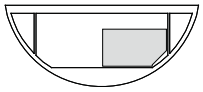	+25.7	+31.9	+38.1
	LD-3-45W	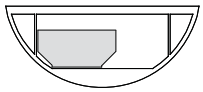	-38.1	-31.9	-25.7
		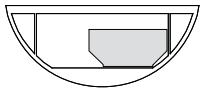	+25.7	+31.9	+38.1
	LD-3 Pallet	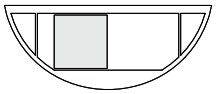	-38.1	-31.9	-25.7
		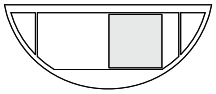	+25.7	+31.9	+38.1

APPLICABLE CONFIGURATIONS
A, B, C, E, F

BOEING PROPRIETARY
Export Controlled by ECCN 9E991

CARGO LATERAL IMBALANCE CONTROL (Continued)

UNIT LOAD DEVICE LATERAL CENTER OF GRAVITY RANGE (Continued)					
SIZE CODE	COMMON NAME	ORIENTATION REAR VIEW	ALLOWABLE LATERAL C.G.		
			LEFTMOST B.B.L. - IN.	NOMINAL B.B.L. - IN.	RIGHTMOST B.B.L. - IN.
L	LD-5 LD-11 Half Pallet	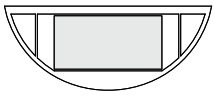	-12.5	0.0	+12.5
	LD-6		-12.5	0.0	+12.5
	LD-10	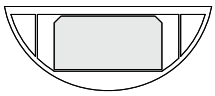	-12.5	0.0	+12.5
M	P6	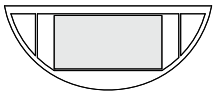	-12.5	0.0	+12.5
	LD-36	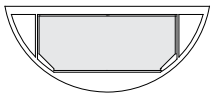	-12.5	0.0	+12.5
N	Half Pallet	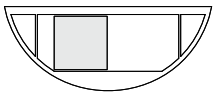	-38.1	-31.9	-25.7
		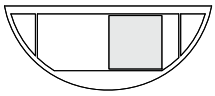	+25.7	+31.9	+38.1
P	LD-2	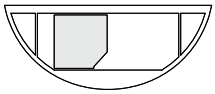	-43.8	-39.1	-34.4
		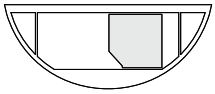	+34.4	+39.1	+43.8
Q	LD-4 LD-8 Longitudinal	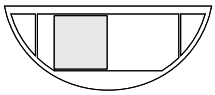	-38.4	-32.4	-26.4
		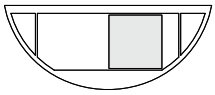	+26.4	+32.4	+38.4

CAUTION THE ADDITIONAL CENTER OF GRAVITY ENVELOPE RESTRICTIONS PROVIDED IN CHP-SEC 1-63-XXX MUST BE OBSERVED FOR ALL UNIT LOAD DEVICES.

APPLICABLE CONFIGURATIONS
A, B, C, E, F

BOEING PROPRIETARY
Export Controlled by ECCN 9E991

CARGO LATERAL IMBALANCE CONTROL (Continued)

Operator Convenience

The following unit load devices may be assumed to have zero CLIM provided they are uniformly loaded about their base, since they are symmetrical about the airplane centerline.

- LD-5's
- LD-6's
- LD-7's
- LD-9's
- LD-10's
- LD-11's
- P1's
- P6's
- LD-36's
- Half Pallets (Size Code L)

APPLICABLE CONFIGURATIONS
A, B, C, E, F

BOEING PROPRIETARY
Export Controlled by ECCN 9E991

CARGO LATERAL IMBALANCE CONTROL (Continued)

The following combined pairs of unit load devices may be assumed to have zero CLIM, provided each of the paired ULDs is uniformly loaded about its base and the weight between the left and right ULDs is evenly distributed, since for these conditions the calculated net cargo lateral imbalance moment for the pair is zero.

- LD-2's
- LD-3's
- LD-4's Longitudinal
- LD-8's Longitudinal
- Half Pallets (Size Code N)

Cargo and baggage in the aft bulk cargo compartment may be assumed to have zero CLIM if uniformly loaded.

Sample Problem

Eleven LD-1's are loaded on the left side of the airplane to a weight of 2000 LB (907.2 KG) each. The other unit load devices are assumed to be symmetrical about the centerline of the airplane. The lateral center of gravity for each ULD loaded is at B.B.L. = -31.5 inches. Thus, the cargo lateral imbalance moment equals:

$$\text{NET CLIM} = (11\ \text{LD-1s}) \times (2000\ \text{LB}) \times (-31.5\ \text{IN.}) = -693000\ \text{LB-IN.}$$

$$\text{NET CLIM} = (11\ \text{LD-1s}) \times (907.2\ \text{KG}) \times (-31.5\ \text{IN.}) = -314345\ \text{KG-IN.}$$

To reduce the lateral imbalance, five of the LD-1's are switched to the right hand side of the airplane, leaving six on the left hand side, and the new cargo lateral imbalance calculation is:

$$\text{CLIM (Left Side)} = (6\ \text{LD-1s}) \times (2000\ \text{LB}) \times (-31.5\ \text{IN.}) = -378000\ \text{LB-IN.}$$

$$\text{CLIM (Right Side)} = (5\ \text{LD-1s}) \times (2000\ \text{LB}) \times (+31.5\ \text{IN.}) = +315000\ \text{LB-IN.}$$

and since

$$\text{NET CLIM} = \sum \text{CLIM (for each ULD)}$$

$$\text{NET CLIM} = (-378000\ \text{LB-IN.}) + (+315000\ \text{LB-IN.}) = -63000\ \text{LB-IN.}$$

or in metric units:

$$\text{CLIM (Left Side)} = (6\ \text{LD-1s}) \times (907.2\ \text{KG}) \times (-31.5\ \text{IN.}) = -171461\ \text{KG-IN.}$$

$$\text{CLIM (Right Side)} = (5\ \text{LD-1s}) \times (907.2\ \text{KG}) \times (+31.5\ \text{IN.}) = +142884\ \text{KG-IN.}$$

$$\text{NET CLIM} = (-171461\ \text{KG-IN.}) + (+142884\ \text{KG-IN.}) = -28577\ \text{KG-IN.}$$

By switching the five unit load devices to the right side, an attempt was made to load the airplane symmetrically. Therefore, using the guidelines provided in CHP-SEC 1-04-xxx, the NET CLIM of -63000 IN-LB (28577 KG-IN.) can be considered random. No reduction is required in either taxi or landing weight.

APPLICABLE CONFIGURATIONS
A, B, C, E, F

BOEING PROPRIETARY
Export Controlled by ECCN 9E991

CARGO LATERAL IMBALANCE CONTROL

PROCEDURE FOR CALCULATION OF IMBALANCE

Procedures in this section show how to increase the allowable airplane Taxi Weight by controlling the cargo lateral imbalance. Cargo lateral imbalance is one component of the total airplane lateral imbalance. Refer to CHP-SEC 1-04-xxx for the Airplane Lateral Imbalance Limitations for the full range of airplane operations.

Occurrence

Cargo lateral imbalance occurs when the Center of Gravity of the cargo loaded is offset to the right or left of the airplane centerline. Note that this condition does not affect the longitudinal Center of Gravity which is measured as a percent of Mean Aerodynamic Chord (MAC).

Measurement

Cargo lateral imbalance is measured by the cargo lateral imbalance moment (CLIM) of the total cargo load. It is the responsibility of the operator to determine the cargo lateral imbalance moment. CLIM is determined as follows:

1. Determine the actual body buttock line (B.B.L.) for each loaded ULD based on the operator's loading practices. The actual B.B.L. must be within the allowable B.B.L. shown in the following table for the type of ULD loaded. Actual buttock lines to the left of the airplane centerline are negative and buttock lines to the right of the airplane centerline are positive.
2. Calculate the CLIM for each ULD using the following equation:

$$\text{CLIM} = \text{Cargo Weight in Pounds (Kilograms)} \times \text{Actual B.B.L. in Inches}$$

3. Calculate the NET CLIM by summing the CLIM for each ULD:

$$\text{NET CLIM} = \sum \text{CLIM (for each ULD)}$$

4. Determine the allowable taxi weight using the calculated NET CLIM and the procedures outlined in CHP-SEC 1-04-xxx.

APPLICABLE CONFIGURATIONS
D

BOEING PROPRIETARY
Export Controlled by ECCN 9E991

CARGO LATERAL IMBALANCE CONTROL (Continued)

Allowable B.B.L.'s for cargo loaded into unit load devices are shown in the following table.

UNIT LOAD DEVICE LATERAL CENTER OF GRAVITY RANGE					
SIZE CODE	COMMON NAME	ORIENTATION REAR VIEW	ALLOWABLE LATERAL C.G.		
			LEFTMOST B.B.L. - IN.	NOMINAL B.B.L. - IN.	RIGHTMOST B.B.L. - IN.
A	P1 LD-7 LD-9		-12.5	0.0	+12.5
K	LD-1	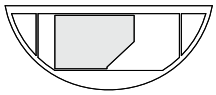	-38.1	-31.9	-25.7
		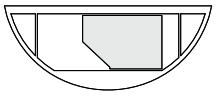	+25.7	+31.9	+38.1
	LD-3	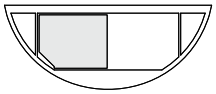	-38.1	-31.9	-25.7
		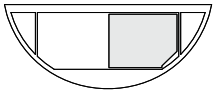	+25.7	+31.9	+38.1
	LD-3-45	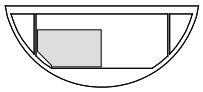	-38.1	-31.9	-25.7
		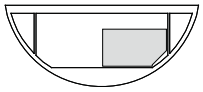	+25.7	+31.9	+38.1
	LD-3-45W	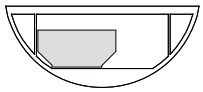	-38.1	-31.9	-25.7
		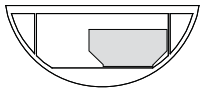	+25.7	+31.9	+38.1
	LD-3 Pallet	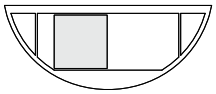	-38.1	-31.9	-25.7
		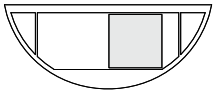	+25.7	+31.9	+38.1

APPLICABLE CONFIGURATIONS
D

BOEING PROPRIETARY
Export Controlled by ECCN 9E991

CARGO LATERAL IMBALANCE CONTROL (Continued)

UNIT LOAD DEVICE LATERAL CENTER OF GRAVITY RANGE (Continued)					
SIZE CODE	COMMON NAME	ORIENTATION REAR VIEW	ALLOWABLE LATERAL C.G.		
			LEFTMOST B.B.L. - IN.	NOMINAL B.B.L. - IN.	RIGHTMOST B.B.L. - IN.
L	LD-5 LD-11 Half Pallet	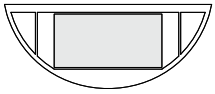	-12.5	0.0	+12.5
	LD-6	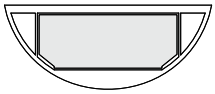	-12.5	0.0	+12.5
	LD-10	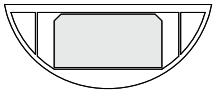	-12.5	0.0	+12.5
M	P6	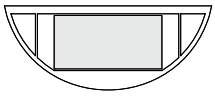	-12.5	0.0	+12.5
	LD-36	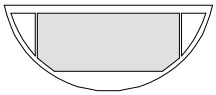	-12.5	0.0	+12.5
N	Half Pallet	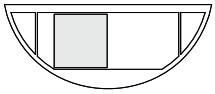	-38.1	-31.9	-25.7
		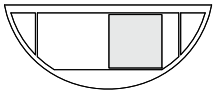	+25.7	+31.9	+38.1
P	LD-2	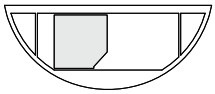	-43.8	-39.1	-34.4
		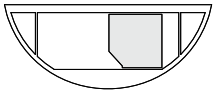	+34.4	+39.1	+43.8
Q	LD-4	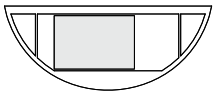	-24.2	-14.6	-5.0
	LD-8	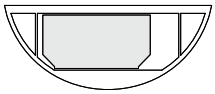	-24.2	-14.6	-5.0
	LD-4 LD-8 Longitudinal	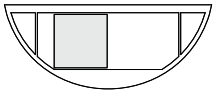	-38.4	-32.4	-26.4
		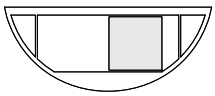	+26.4	+32.4	+38.4

APPLICABLE CONFIGURATIONS
D

BOEING PROPRIETARY
Export Controlled by ECCN 9E991

CARGO LATERAL IMBALANCE CONTROL (Continued)

CAUTION THE ADDITIONAL CENTER OF GRAVITY ENVELOPE RESTRICTIONS PROVIDED IN CHP-SEC 1-63-XXX MUST BE OBSERVED FOR ALL UNIT LOAD DEVICES.

Operator Convenience

The following unit load devices may be assumed to have zero CLIM provided they are uniformly loaded about their base, since they are symmetrical about the airplane centerline.

- LD-5's
- LD-6's
- LD-7's
- LD-9's
- LD-10's
- LD-11's
- P1's
- P6's
- LD-36's
- Half Pallets (Size Code L)

The following combined pairs of unit load devices may be assumed to have zero CLIM, provided each of the paired ULDs is uniformly loaded about its base and the weight between the left and right ULDs is evenly distributed, since for these conditions the calculated net cargo lateral imbalance moment for the pair is zero.

- LD-2's
- LD-3's
- LD-4's Longitudinal
- LD-8's Longitudinal
- Half Pallets (Size Code N)

Cargo and baggage in the aft bulk cargo compartment may be assumed to have zero CLIM if uniformly loaded.

Sample Problem

Eleven LD-1's are loaded on the left side of the airplane to a weight of 2000 LB (907.2 KG) each. The other unit load devices are assumed to be symmetrical about the centerline of the airplane. The lateral center of gravity for each ULD loaded is at B.B.L. = -31.5 inches. Thus, the cargo lateral imbalance moment equals:

$$\text{NET CLIM} = (11\ \text{LD-1s}) \times (2000\ \text{LB}) \times (-31.5\ \text{IN.}) = -693000\ \text{LB-IN.}$$

$$\text{NET CLIM} = (11\ \text{LD-1s}) \times (907.2\ \text{KG}) \times (-31.5\ \text{IN.}) = -314345\ \text{KG-IN.}$$

APPLICABLE CONFIGURATIONS
D

BOEING PROPRIETARY
Export Controlled by ECCN 9E991

CARGO LATERAL IMBALANCE CONTROL (Continued)

To reduce the lateral imbalance, five of the LD-1's are switched to the right hand side of the airplane, leaving six on the left hand side, and the new cargo lateral imbalance calculation is:

$$\text{CLIM (Left Side)} = (6\ \text{LD-1s}) \times (2000\ \text{LB}) \times (-31.5\ \text{IN.}) = -378000\ \text{LB-IN.}$$

$$\text{CLIM (Right Side)} = (5\ \text{LD-1s}) \times (2000\ \text{LB}) \times (+31.5\ \text{IN.}) = +315000\ \text{LB-IN.}$$

and since

$$\text{NET CLIM} = \sum \text{CLIM (for each ULD)}$$

$$\text{NET CLIM} = (-378000\ \text{LB-IN.}) + (+315000\ \text{LB-IN.}) = -63000\ \text{LB-IN.}$$

or in metric units:

$$\text{CLIM (Left Side)} = (6\ \text{LD-1s}) \times (907.2\ \text{KG}) \times (-31.5\ \text{IN.}) = -171461\ \text{KG-IN.}$$

$$\text{CLIM (Right Side)} = (5\ \text{LD-1s}) \times (907.2\ \text{KG}) \times (+31.5\ \text{IN.}) = +142884\ \text{KG-IN.}$$

$$\text{NET CLIM} = (-171461\ \text{KG-IN.}) + (+142884\ \text{KG-IN.}) = -28577\ \text{KG-IN.}$$

By switching the five unit load devices to the right side, an attempt was made to load the airplane symmetrically. Therefore, using the guidelines provided in CHP-SEC 1-04-xxx, the NET CLIM of -63000 IN-LB (28577 KG-IN.) can be considered random. No reduction is required in either taxi or landing weight.

APPLICABLE CONFIGURATIONS
D

BOEING PROPRIETARY
Export Controlled by ECCN 9E991

AIRPLANE JACKING

JACK POINT LOCATIONS

The following figure provides jack point locations.

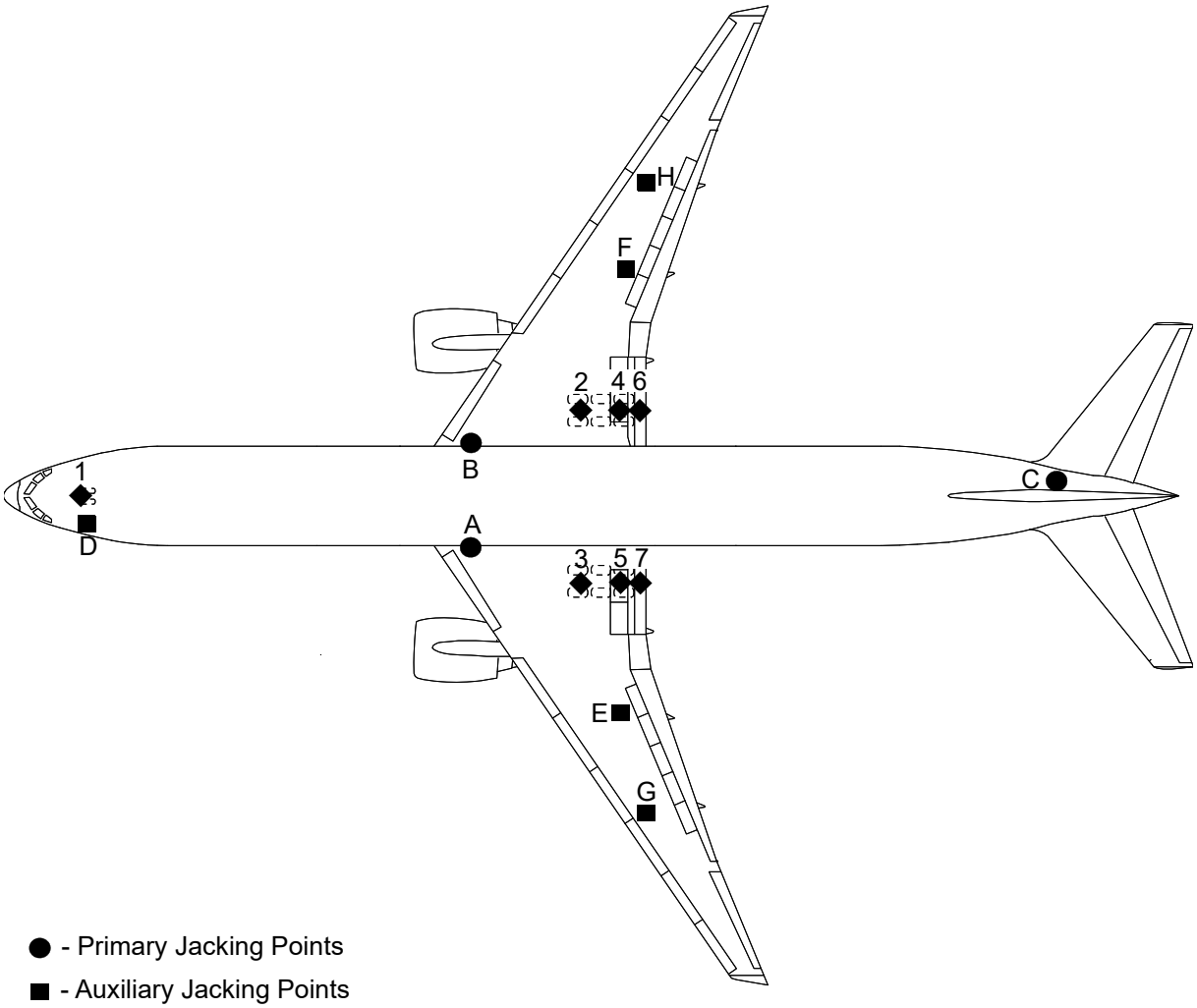

● - Primary Jacking Points

■ - Auxiliary Jacking Points

◆ - Nose and Main Gear Jacking Points

APPLICABLE CONFIGURATIONS
All

BOEING PROPRIETARY
Export Controlled by ECCN 9E991

AIRPLANE JACKING (Continued)

MAXIMUM ALLOWABLE JACKING LOADS

The following allowable jacking loads and envelopes are based on the structural limits of the airplane.

JACK POINT		MAXIMUM JACKING LOADS		LOCATION		
		LB	KG	B.A. IN.	B.B.L.[a] IN.	W.L. IN.
Primary Wing	A	238000	107954	1034.8	+122.2	128.8
	B	238000	107954	1034.8	-122.2	128.8
Primary Aft Fuselage	C	99000	44905	2457.5	+34.4	182.0
Auxiliary Forward Body	D	60000	27215	122.3	-80.4	139.1
Auxiliary Rear Spar	E	26000	11793	1421.8	-527.3	207.2
	F	26000	11793	1421.8	+527.3	207.2
Auxiliary Front Spar	G	17100	7756	1431.6	-787.0	239.6
	H	17100	7756	1431.6	+787.0	239.6
Nose Gear	1	75500	34246	114.5	0.0	Varies
Main Gear[b]	2	191300	86772	1286.5	+216.0	Varies
	3	191300	86772	1286.5	-216.0	Varies
	4	178200	80830	1401.7	+216.0	Varies
	5	178200	80830	1401.7	-216.0	Varies
	6	167500	75976	1409.0	+216.0	Varies
	7	167500	75976	1409.0	-216.0	Varies

[a] Negative values represent jack points on the left hand side of the airplane and positive values represent jack points on the right hand side of the airplane.

[b] Jack point balance arms are for gears in the static taxi position. Main gear jack points will vary with different oleo extensions. See Section 1-80-08x for balance arm versus oleo extension.

WARNINGS
- DISTRIBUTION OF LOAD ON JACKS SHOULD BE MONITORED DURING JACKING OPERATIONS, OTHERWISE STRUCTURAL DEFLECTION MAY CAUSE JACK LOADS TO EXCEED MAXIMUM VALUE.
- WHEN JACKING ON MAIN GEAR JACKING POINTS, THERE MUST BE A MINIMUM OF ONE INCH OF OLEO EXTENSION.

APPLICABLE CONFIGURATIONS
All

BOEING PROPRIETARY
Export Controlled by ECCN 9E991

AIRPLANE JACKING (Continued)

LIMITATIONS ENVELOPES

During the airplane raising and lowering operation the airplane must be within the weight and balance limits as shown. Refer to section 1-00-04x for conversion formulas between %MAC and Balance Arms.

Primary (A,B,C) Jack Points (Gross Weight in LB)

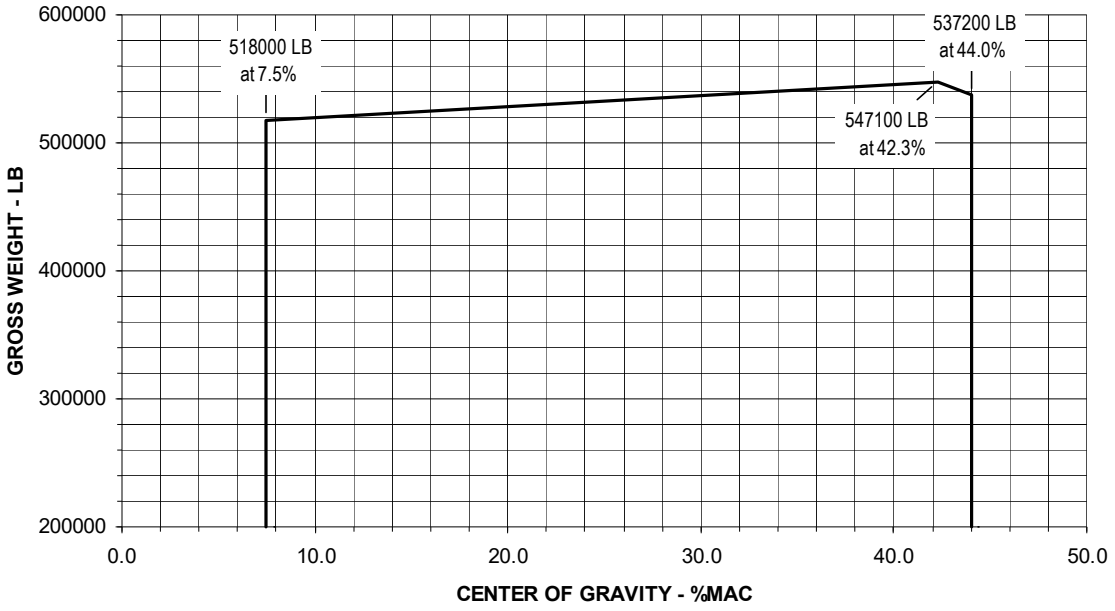

Forward Body (D) Jack Point (Gross Weight in LB)

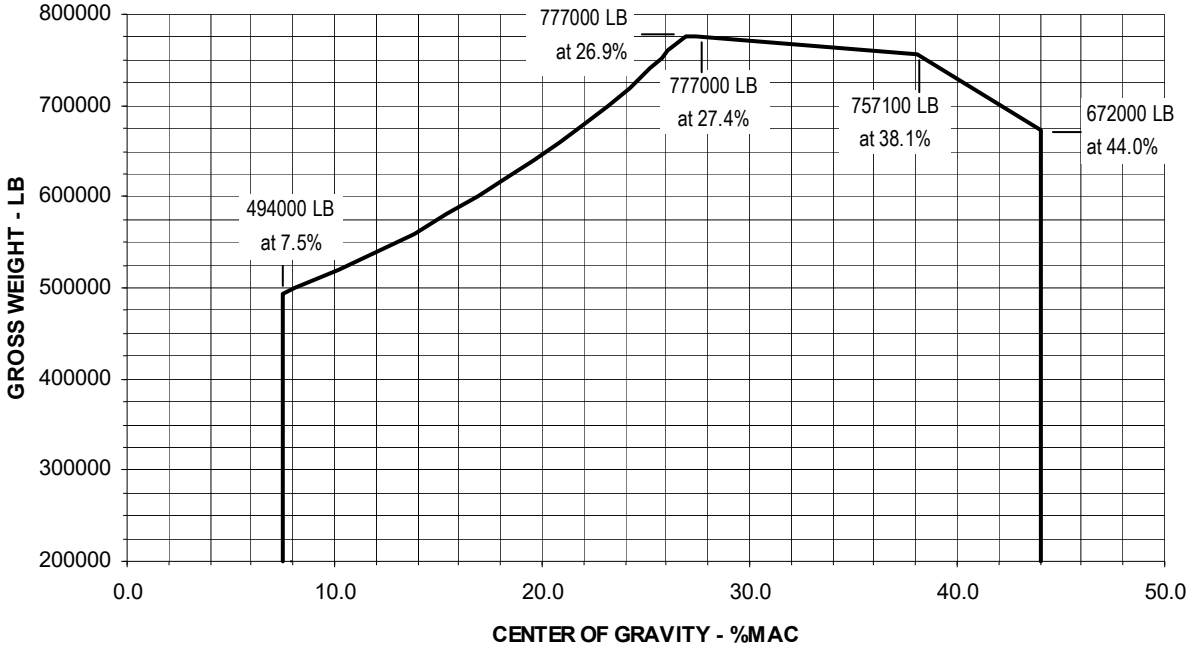

APPLICABLE CONFIGURATIONS
All

BOEING PROPRIETARY
Export Controlled by ECCN 9E991

AIRPLANE JACKING (Continued)

Primary (A,B,C) Jack Points (Gross Weight in KG)

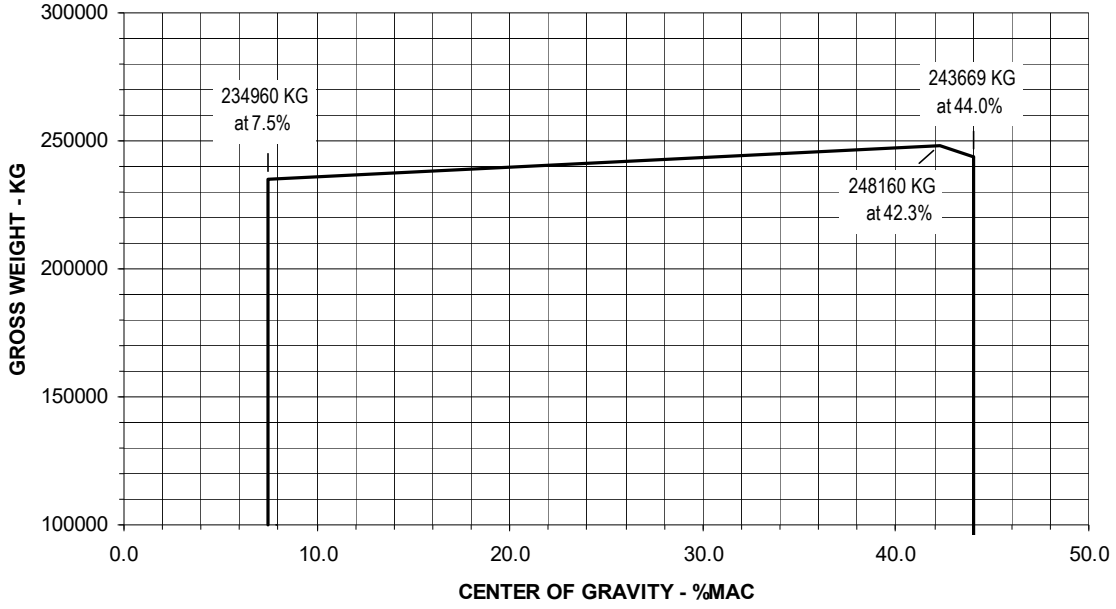

Forward Body (D) Jack Points (Gross Weight in KG)

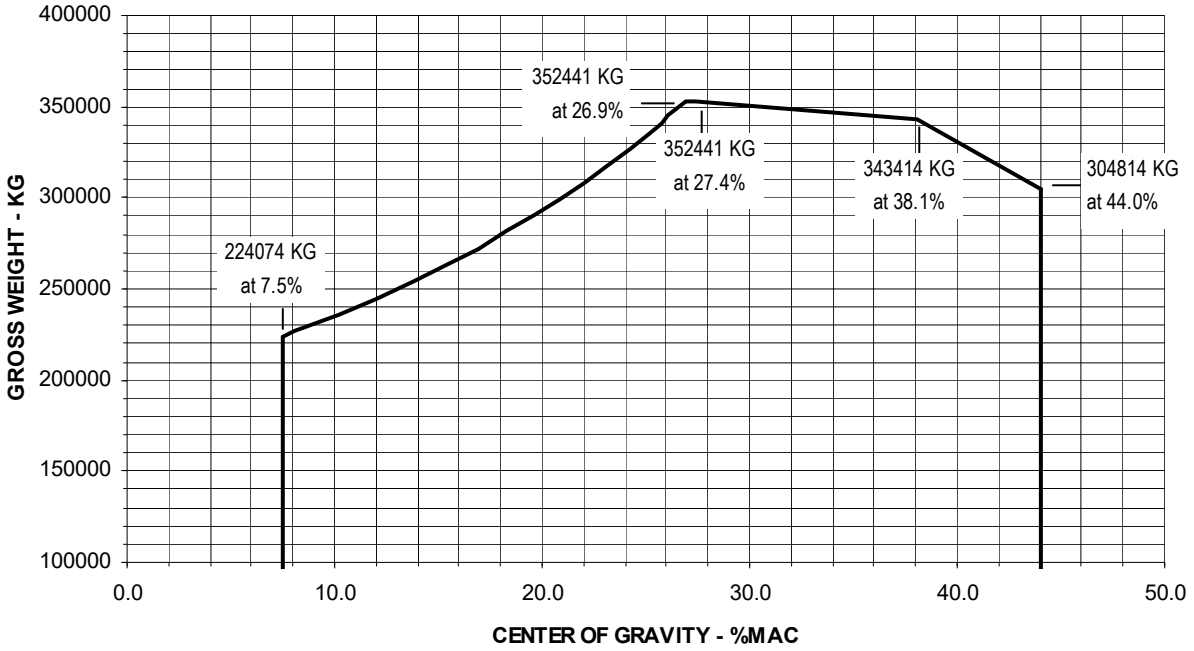

APPLICABLE CONFIGURATIONS
All

BOEING PROPRIETARY
Export Controlled by ECCN 9E991

MAIN LANDING GEAR JACK POINTS FOR VARIOUS OLEO EXTENSIONS

JACK POINT BALANCE ARMS VERSUS OLEO EXTENSION

The following main landing gear figure shows how to determine the amount of oleo extension (Dimension “A”). The corresponding chart diagrams the relationship between the main landing gear, forward, aft, and auxiliary axle jack point balance arms and the main landing gear oleo extension (Dimension “A”).

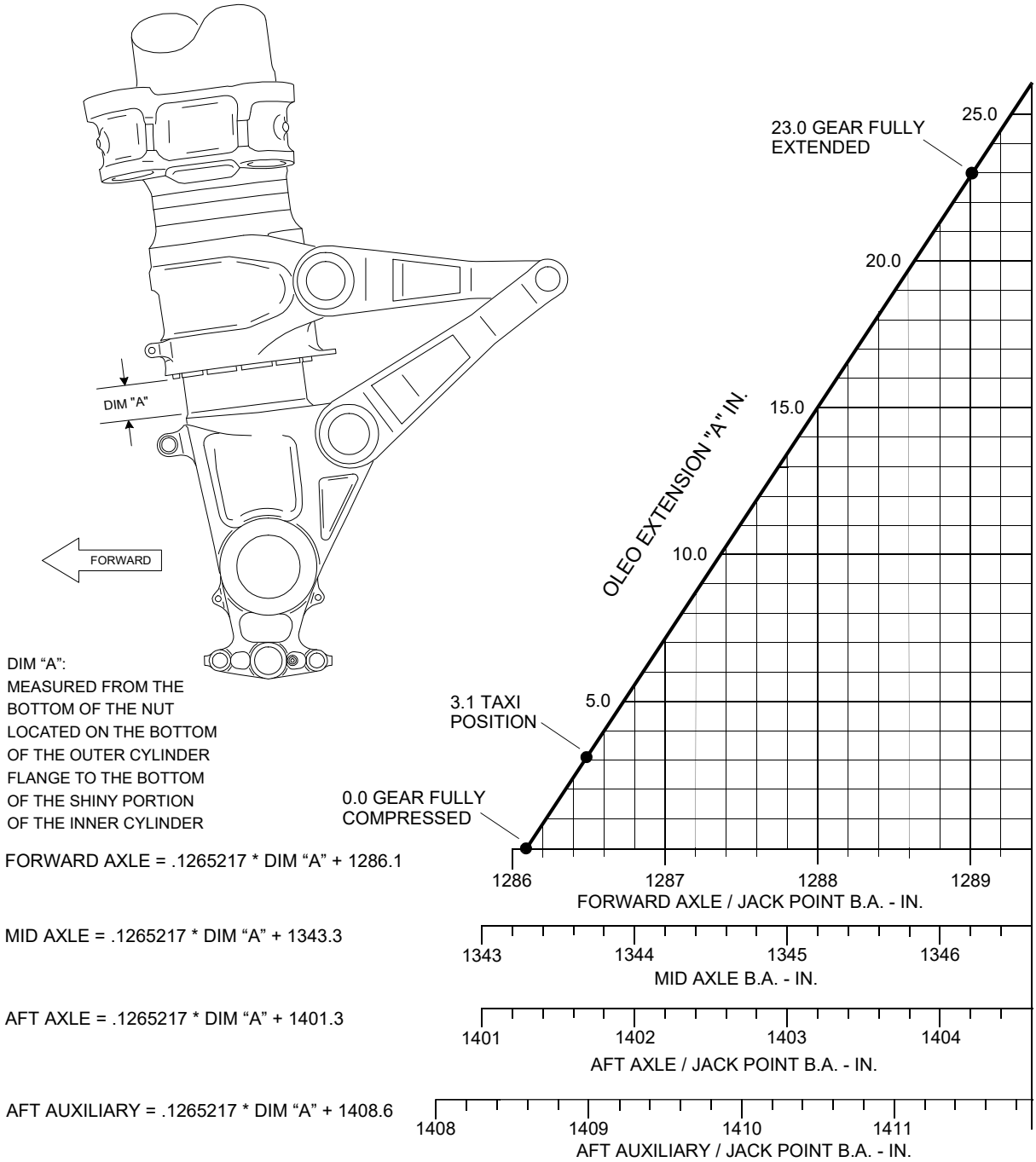

APPLICABLE CONFIGURATIONS
All

Copyright © 2023 Boeing. All Rights Reserved.
BOEING PROPRIETARY
Export Controlled by ECCN 9E991

AIRPLANE WEIGHING PROCEDURE

GENERAL INFORMATION

This section describes the recommended procedures for preparation and weighing of the model 777-300 airplane. Weighing facilities, weighing equipment and leveling provisions required for weighing the airplane are also discussed. Useful information concerning the procedures for establishing aircraft initial weight, fleet weights, re-establishing fleet weights, periodic weighing requirements, etc. may be found in FAA Advisory Circular 120-27.

Airplane weighing may be accomplished by:

- The use of platform scales.
- The use of electronic load cells by jacking the airplane at the landing gear axle jack points.
- The use of electronic load cells by jacking the airplane at the primary jacking points.

CAUTION FOR SAFETY REASONS, WEIGHING THE AIRPLANE BY JACKING AT THE PRIMARY JACKING POINTS IS NOT RECOMMENDED, AND SHOULD ONLY BE USED WHEN OTHER PROCEDURES ARE NOT AVAILABLE.

WEIGHING FACILITIES AND EQUIPMENT

The airplane should be weighed in still air, preferably inside a closed facility that will:

- Exclude all wind and drafts.
- Permit shutdown of air conditioning during the weighing operation.
- Maintain a relatively constant temperature.
- Provide a level weighing surface and sufficient overhead clearance.

The required equipment for weighing an airplane consists of:

- Certified electronic or mechanical weighing equipment.
- Hydraulic jacks and adapters, if necessary.
- Landing gear oleo locks, if necessary.
- Plumb bob.

PREPARATION FOR AIRPLANE WEIGHING

The airplane configuration is of extreme importance in the derivation of a defined airplane operating weight from an actual scale weight. The interior and exterior of the airplane must be as complete as possible. All fluid levels (fuel, oil, water, hydraulic) must be known quantities. The weighing area and equipment usage must be controlled to avoid errors and minimize variation in scale readings.

APPLICABLE CONFIGURATIONS
All

BOEING PROPRIETARY
Export Controlled by ECCN 9E991

AIRPLANE WEIGHING PROCEDURE (Continued)

Fuel

Fuel from all tanks is drained to the trapped (usable and unusable) fuel condition. Trapped fuel is defined as the quantity of fuel which cannot be removed through the production sump tank drains.

To obtain trapped fuel condition:

1. Pump off all usable fuel to sump level.
2. Adjust and maintain airplane attitude at 0.5 degrees nose down (±0.1 degree) longitudinal and 0.0 degrees (±0.1 degree) lateral.
3. Drain the remaining fuel through sump drain valves.

System Fluids

System fluids must be drained or at a known quantity as follows:

- ❑ Drain all waste tanks.
- ❑ Drain potable water system.
- ❑ The following systems must be at a known quantity (serviced for flight is preferred):
  - ❑ Engine Oil
  - ❑ Hydraulic Fluids
  - ❑ Oxygen
  - ❑ Landing Gear Oleo Oil
  - ❑ Fire Extinguisher Charge
  - ❑ Miscellaneous Subsystem Fluids

Airplane Configuration

The condition of the airplane at the time of weighing must be one that is well defined and can be easily repeated. Each of the following steps must be completed prior to weighing:

- ❑ Inventory the airplane using an approved inventory list.
- ❑ Remove all shop equipment, tools, and trash.
- ❑ Stow all loose equipment items in their proper locations.
- ❑ Dry the airplane thoroughly.
- ❑ Close all doors and access panels.
- ❑ Extend or retract the flaps fully (refer to CHP-SEC 1-08-xxx of this document for gear and flap retraction moments).
- ❑ Set the horizontal stabilizer, control surfaces, and spoilers to their neutral positions.
- ❑ Inflate landing gear tires to specified operating pressures.

APPLICABLE CONFIGURATIONS
All

BOEING PROPRIETARY
Export Controlled by ECCN 9E991

AIRPLANE WEIGHING PROCEDURE (Continued)

WEIGHING OPERATION

The airplane should be weighed in a level longitudinal attitude when possible. If the airplane cannot be leveled for weighing, the longitudinal attitude must be within ± 2 degrees from level during the actual weighing operation, and the measured center of gravity must be arithmetically corrected to an equivalent “level” center of gravity. This requires application of the correction factors from the table in the “Non-Level Weighing” section on page 6.

The recommended method of determining the longitudinal attitude of the aircraft is to attach a plumb bob to the plumb bob fitting located in the right main gear wheel well and to read the longitudinal attitude from the corresponding scale.

When the airplane is being weighed on platform scales or the main landing gear jacking points, it is necessary to measure the main landing gear oleo extension since the balance arm of the weight reaction point varies with the extension of the oleo strut. (Refer to CHP SEC 1-80-xxx of this document for further information.)

WEIGHING PROCEDURE USING PLATFORM SCALES

The following procedure outlines the method for weighing the airplane on portable or floor level platform scales. The scales may be mechanical beam or electronic.The balance

1. The balance arm for the nose gear jack point is shown in CHP-SEC 1-80-00x.
2. To obtain the balance arm location of the main gear, it is necessary to measure the main landing gear oleo extension since the balance arm of the weight reaction point varies with the extension of the oleo strut. (Refer to CHP-SEC 1-80-08x of this document for further information.)
3. Follow weighing equipment manufacturer’s operating instructions.
4. Zero the platform scales prior to putting the airplane on the scales. All undesirable tare should be off the scales.
5. Position the airplane on the scales. The approach should be straight and the airplane should be brought slowly and smoothly to a stop, without applying airplane brakes.
6. Inflate or deflate landing gear oleos as required to obtain the desired longitudinal attitude. Check the attitude with the plumb bob.
7. Record landing gear oleo extensions.
8. Record weight reading obtained from each airplane weight reaction point.
9. Remove the airplane from the scales.
10. Check the scales for zero load condition.
11. Repeat weighing procedure as needed to verify airplane weight.

BOEING PROPRIETARY
Export Controlled by ECCN 9E991

AIRPLANE WEIGHING PROCEDURE (Continued)

WEIGHING PROCEDURE USING ELECTRONIC LOAD CELLS

The airplane can be weighed using individual electronic load cells with adapters for interface with ground support equipment jacks and airplane jack points. It is most important that the weighing kit be adequately warmed up and that the airplane, ground support equipment, and weighing cells attain the same even temperature prior to weighing the airplane. Load cells require care in placement to prevent side loads. When using jacks, it is imperative to remove all weighing cell misalignment due to uneven floors or airplane structural deflection.

The maximum jacking loads shown in CHP-SEC 1-80-xxx of this document must not be exceeded during jacking operations.

The following procedures outline the method for weighing the airplane with electronic load cells at either of the following:

- Landing gear axle jack points.
- Primary jacking points.

Landing Gear Axle Jack Points

Follow these procedures when weighing the airplane with electronic load cells at the landing gear axle jack points:

1. The balance arm for the nose gear jack point is shown in CHP-SEC 1-80-00x.
2. To obtain the balance arm location of the main gear jack points, it is necessary to measure the main landing gear oleo extension since the balance arm of the weight reaction point varies with the extension of the oleo strut. (Refer to CHP-SEC 1-80-08x of this document for further information.)
3. Follow weighing equipment manufacturer's operating instructions.
4. Inflate or deflate landing gear oleos as required to obtain the desired longitudinal attitude. Check the attitude with plumb bob.
5. Record landing gear oleo extensions.
6. Zero electronic weighing equipment prior to raising the airplane.
7. Center the jacks, with load cells installed, under the jack points. Proper alignment must be made between load cells and jack points.
8. Jack all positions at an even rate, maintaining a level attitude, until tires clear the floor.
9. Check airplane level attitude with the plumb bob. If necessary, jack individual points to obtain the desired attitude.
10. Record weight reading obtained from each airplane weight reaction point.
11. Lower airplane gently to the floor, maintaining a level attitude, until load cells are completely clear of the jack points.
12. Check the scales for zero load condition..
13. Repeat weighing procedure as needed to verify airplane weight.

APPLICABLE CONFIGURATIONS
All

BOEING PROPRIETARY
Export Controlled by ECCN 9E991

AIRPLANE WEIGHING PROCEDURE (Continued)

Primary Jacking Points

Follow these procedures when weighing the airplane with electronic load cells at the primary jacking points:

1. See CHP-SEC 1-80-xxx of this document for balance arms and load limits for primary jacking points.
2. Follow weighing equipment manufacturer's operating instructions.
3. Bleed all air from the nose and main landing gear oleos and install oleo uplocks to prevent the oleos from extending.

WARNING ALL AIR MUST BE REMOVED FROM THE LANDING GEAR OLEOS IF UPLOCKS ARE INSTALLED. IMPROPER OLEO DEFLATION MAY CAUSE OLEO UPLOCK FAILURE.

4. Level the airplane prior to jacking so the airplane may be raised and lowered evenly on jack points, and minimize side loads. If the airplane attitude is nose down prior to jacking, an optional method of leveling the airplane is to inflate the nose gear oleo. The nose gear oleo would then be allowed to fully extend during the jacking operation.
5. Secure the main landing gear trucks, if required, by rope to prevent rotation during the jacking operation.
6. Zero electronic weighing equipment prior to raising the airplane.
7. Center the jacks, with load cells installed under the jack points. Proper alignment must be made between load cells and jack points.
8. Jack all positions at an even rate, maintaining a level attitude, until tires clear the floor.
9. Check airplane level attitude with the plumb bob. If necessary, jack individual points to obtain the desired attitude.
10. Record weight reading obtained from each airplane weight reaction point.
11. Lower airplane gently to the floor, maintaining a level attitude, until load cells are completely free of the airplane.
12. Check the load cells for zero load condition.
13. Repeat weighing procedure as needed to verify airplane weight.

APPLICABLE CONFIGURATIONS
All

BOEING PROPRIETARY
Export Controlled by ECCN 9E991

AIRPLANE WEIGHING PROCEDURE (Continued)

NON-LEVEL WEIGHING

When the airplane is weighed in a non-level condition, the calculated C.G. must be corrected to the level condition. The attitude of the airplane must be known at the time of weighing. Determine the C.G. of the airplane in this non-level condition, and then use the following table to correct the C.G. to the level condition.

ANGLE DEGREES		C.G. CORRECTION IN.
Nose down	-2	6.5
	-1 7/8	6.1
	-1 3/4	5.7
	-1 5/8	5.3
	-1 1/2	4.9
	-1 3/8	4.5
	-1 1/4	4.1
	-1 1/8	3.7
	-1	3.2
	-7/8	2.8
	-3/4	2.4
	-5/8	2.0
	-1/2	1.6
	-3/8	1.2
	-1/4	0.8
	-1/8	0.4
Level	0	0.0

ANGLE DEGREES		C.G. CORRECTION IN.
Level	0	0.0
	1/8	-0.4
	1/4	-0.8
	3/8	-1.2
	1/2	-1.6
	5/8	-2.0
	3/4	-2.4
	7/8	-2.8
	1	-3.2
	1 1/8	-3.7
	1 1/4	-4.1
	1 3/8	-4.5
	1 1/2	-4.9
	1 5/8	-5.3
	1 3/4	-5.7
	1 7/8	-6.1
Tail down	2	-6.5

Non-Level Weighing Example

An airplane weighed in a 1-1/2 degree tail down attitude has a calculated, non-level C.G. at B.A. 1258.0 IN. Applying the C.G. correction of -4.9 inches (from the table) gives the level attitude C.G. at 1253.1 IN.

APPLICABLE CONFIGURATIONS
All

BOEING PROPRIETARY
Export Controlled by ECCN 9E991

TOWING AND TIPPING LIMITATIONS

TOWING AND TIPPING CONSIDERATIONS

Tipping is generally not a concern for 777-300 airplanes if good judgement is exercised in maintaining airplane stability during ground operations. Effects of towing and ground operations on the airplane center of gravity must be taken into account. The absolute tipping limit for the 777-300 airplane is at 60.6% MAC, considerably aft of the ground stability limit. Some of the major factors affecting the airplane tipping and stability limits will include, but are not limited to the following items:

- Airplane Empty Weight
- Airplane Attitude
- Fuel Loading
- Passenger Loading
- Cargo Loading
- Ramp Slope
- Runway Surface Condition
- Snow Loads
- Wind Loads

The ground stability limit takes into account the effects of the following:

- 3% Ramp slope
- Towing forces
- 35 knot headwind

By ensuring that the airplane center of gravity during towing is more forward than the ground stability limit, a tipping situation will be avoided.

NOTE See the Maintenance Manual for towing procedures and ground stability limits during maintenance.

APPLICABLE CONFIGURATIONS
All

BOEING PROPRIETARY
Export Controlled by ECCN 9E991

TOWING AND TIPPING LIMITATIONS (Continued)

TOWING AND TIPPING LIMITS (ENGLISH)

The following diagram shows the towing and tipping limits in english units:

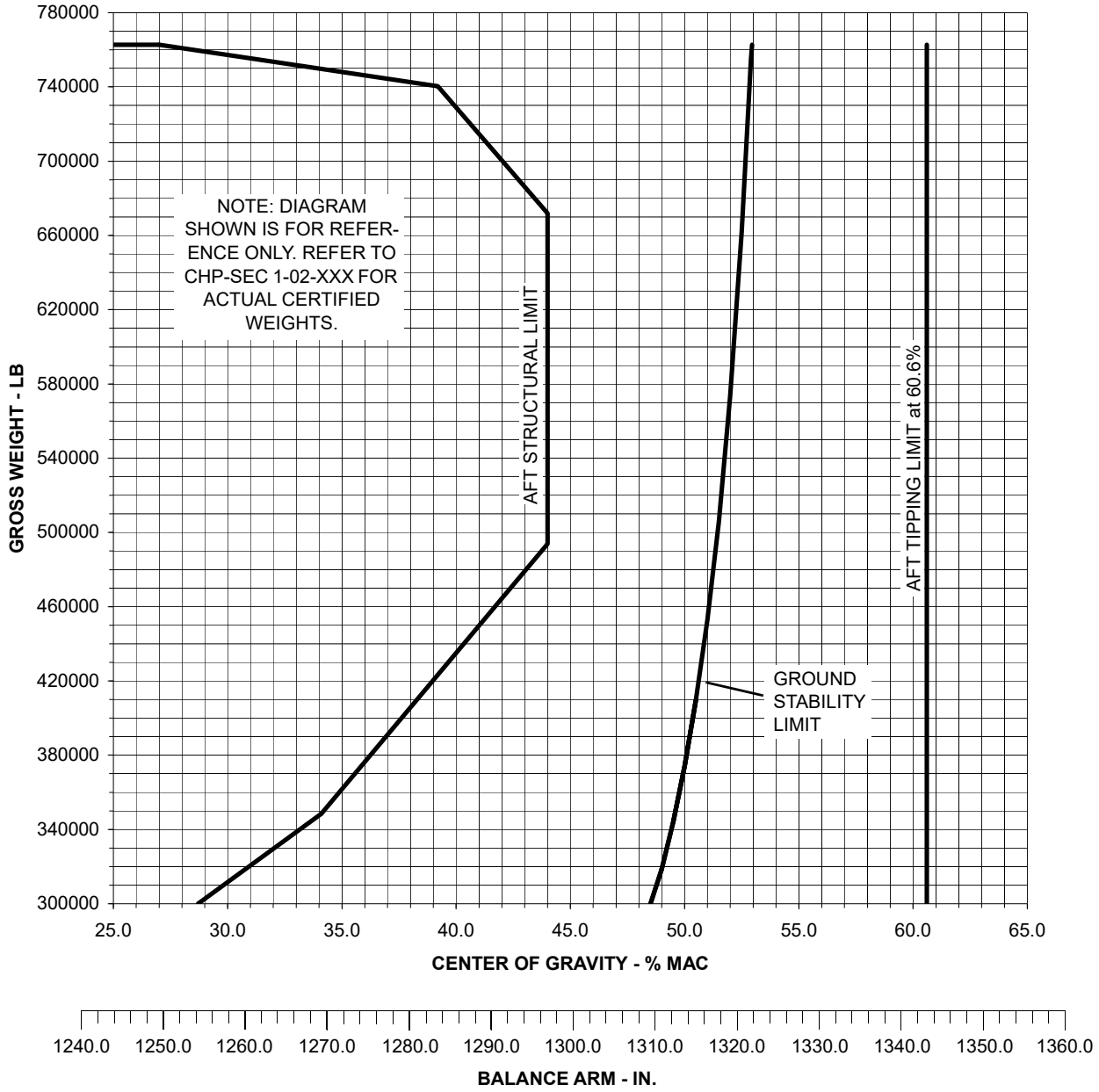

APPLICABLE CONFIGURATIONS
All

BOEING PROPRIETARY
Export Controlled by ECCN 9E991

TOWING AND TIPPING LIMITATIONS (Continued)

TOWING AND TIPPING LIMITS (METRIC)

The following diagram shows the towing and tipping limits in metric units:

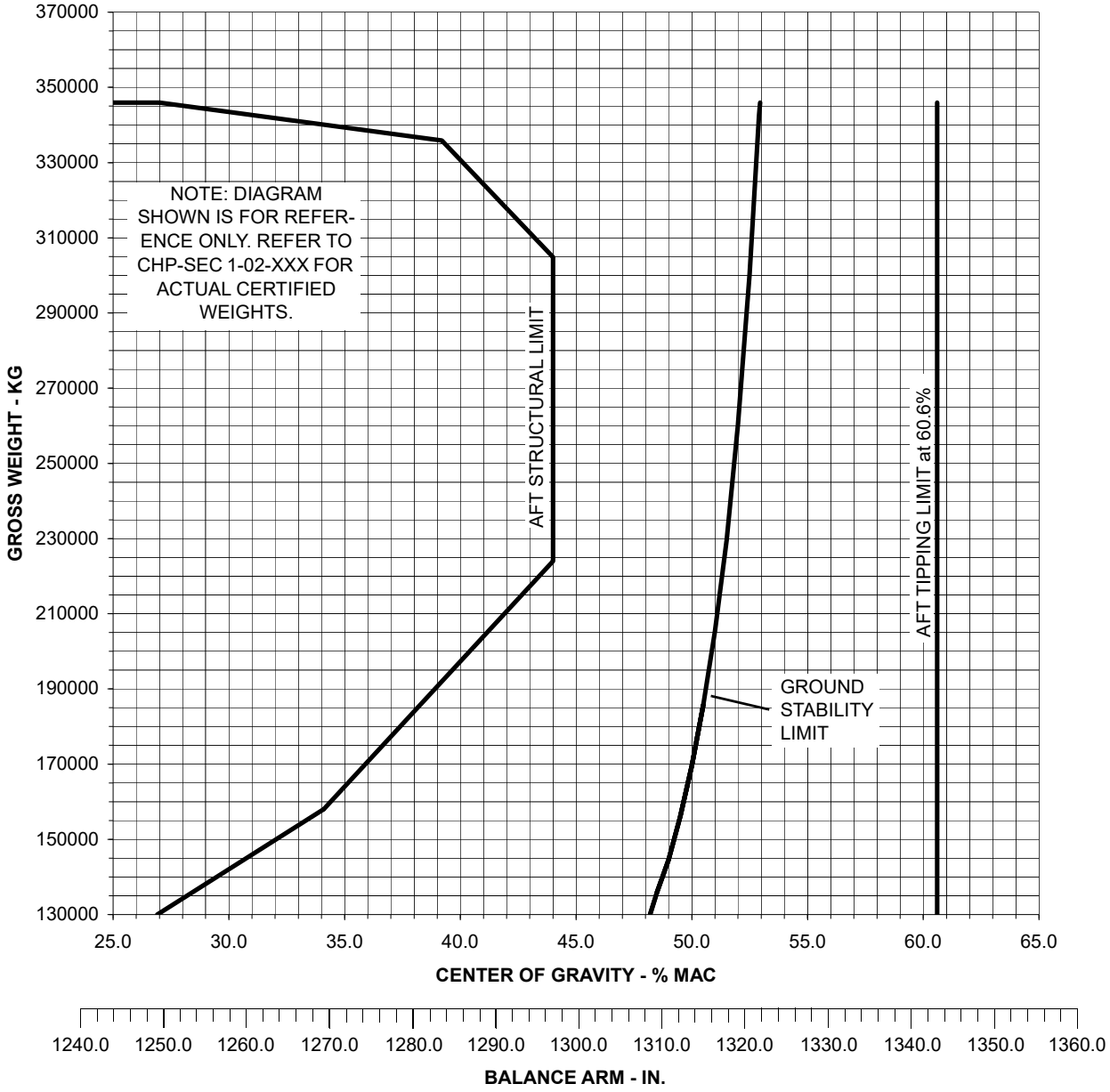

APPLICABLE CONFIGURATIONS
All

BOEING PROPRIETARY
Export Controlled by ECCN 9E991

COMPONENT WEIGHTS AND BALANCE ARMS

WING COMPONENTS

Some of the removable wing components are illustrated in the following figure:

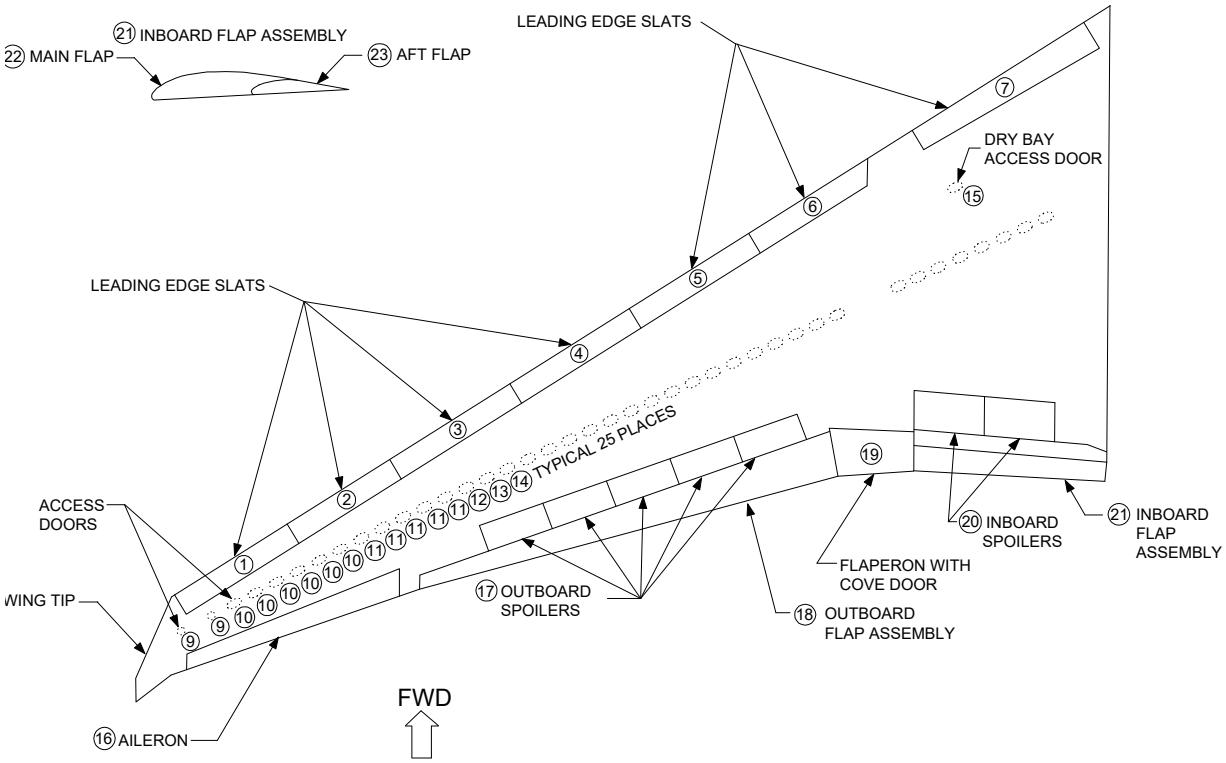

The following table provides nominal weights and balance arms for wing components from the above illustration. Values from this table should only be used to determine approximate weight and balance for specialized types of maintenance.

ITEM NO.	WING COMPONENTS	WEIGHT		B.A. IN.
		LB/EA	KG/EA	
1	Leading Edge Slat No. 1	156	71	1645
2	Leading Edge Slat No. 2	86	39	1545
3	Leading Edge Slat No. 3	99	45	1456
4	Leading Edge Slat No. 4	106	48	1368
5	Leading Edge Slat No. 5	114	52	1283
6	Leading Edge Slat No. 6	128	58	1189
7	Leading Edge Slat No. 7	218	99	1012
8	Wing Tip	102	46	1756
9	Access Doors (2)	2	1	Varies
10	Access Doors (6)	2	1	Varies
11	Access Doors (5)	3	1	Varies
12	Vent Scoop Door	8	4	1521

APPLICABLE CONFIGURATIONS
All

BOEING PROPRIETARY
Export Controlled by ECCN 9E991

COMPONENT WEIGHTS AND BALANCE ARMS (Continued)

ITEM NO.	WING COMPONENTS (Continued)	WEIGHT		B.A. IN.
		LB/EA	KG/EA	
13	Pressure Relief Door	4	2	1509
14	Fuel Access Doors (25)	4	2	Varies
15	Dry Bay Access Door	3	1	1149
16	Aileron	179	81	1654
17	Outboard Spoilers - Typical (5)	27	12	1494
18	Outboard Flap	689	313	1507
19	Flaperon with Cove Door	134	61	1424
20	Inboard Spoilers - Typical (2)	61	28	1408
21	Inboard Flap Assembly	(913)	(414)	(1404)
22	Inboard Main Flap	683	310	1395
23	Inboard Aft Flap	230	104	1432

APPLICABLE CONFIGURATIONS
All

BOEING PROPRIETARY
Export Controlled by ECCN 9E991

COMPONENT WEIGHTS AND BALANCE ARMS

HORIZONTAL STABILIZER COMPONENTS

Some of the removable horizontal stabilizer components are illustrated in the following figure:

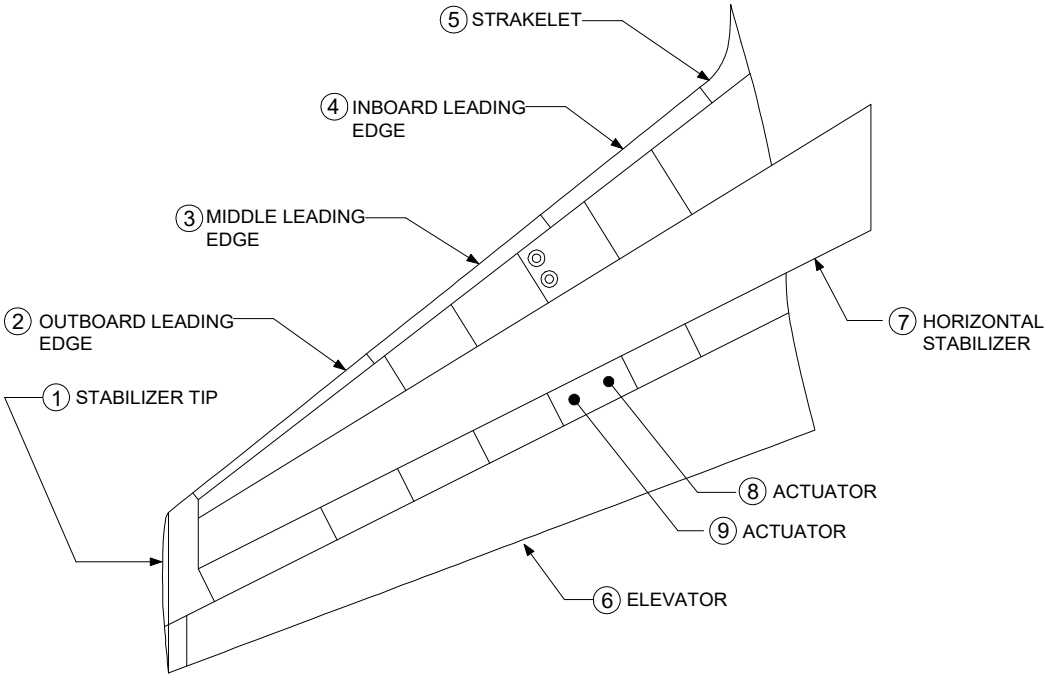

The following table provides nominal weights and balance arms for horizontal stabilizer components from the above illustration. Values from this table should only be used to determine approximate weight and balance for specialized types of maintenance.

ITEM NO.	HORIZONTAL STABILIZER COMPONENTS	WEIGHT		B.A. IN.
		LB/EA	KG/EA	
1	Stabilizer Tip	44	20	2735
2	Outboard Leading Edge	22	10	2641
3	Middle Leading Edge	29	13	2557
4	Inboard Leading Edge	38	17	2479
5	Strakelet	13	6	2428
6	Elevator	346	157	2666
7	Horizontal Stabilizer[a]	2499	1134	2560
8	Elevator Actuator (Wet)	67	30	2613
9	Elevator Actuator (Wet)	67	30	2624

[a] This includes the total horizontal stabilizer structure less the structural components listed in this table.

APPLICABLE CONFIGURATIONS
All

BOEING PROPRIETARY
Export Controlled by ECCN 9E991

COMPONENT WEIGHTS AND BALANCE ARMS

VERTICAL FIN COMPONENTS

Some of the removable vertical fin components are illustrated in the following figure:

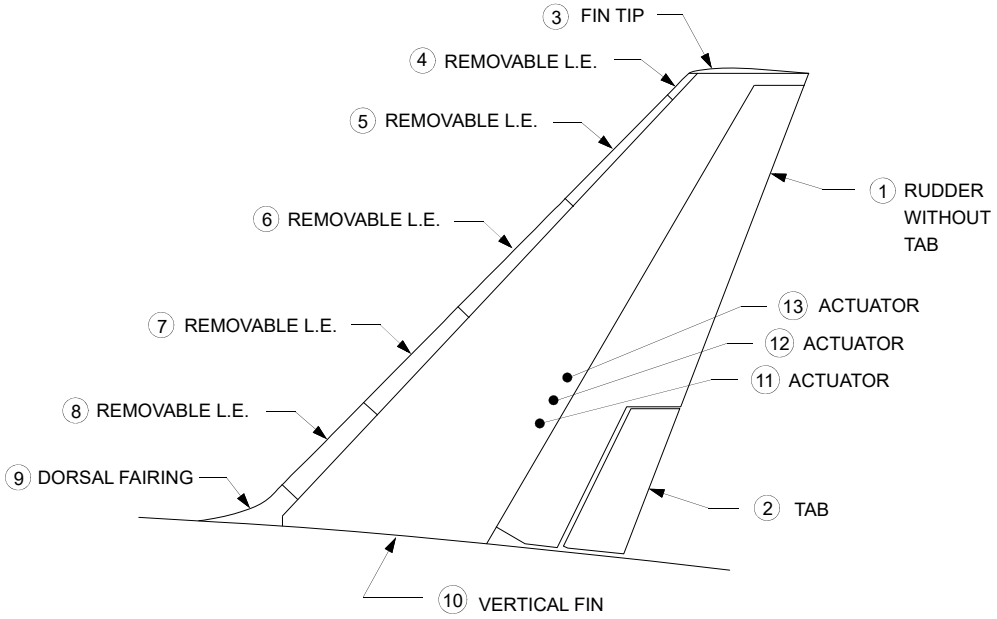

The following table provides nominal weights and balance arms for vertical fin components from the above illustration. Values from this table should only be used to determine approximate weight and balance for specialized types of maintenance.

ITEM NO.	VERTICAL FIN COMPONENTS	WEIGHT		B.A. IN.
		LB/EA	KG/EA	
1	Rudder Without Tab	558	253	2626
2	Tab	104	47	2593
3	Fin Tip	31	14	2681
4	Removable Leading Edge	20	9	2597
5	Removable Leading Edge	25	11	2513
6	Removable Leading Edge	39	18	2431
7	Removable Leading Edge	40	18	2359
8	Removable Leading Edge	19	9	2314
9	Dorsal Fairing	13	6	2282
10	Vertical Fin[a]	2616	1187	2502
11	Rudder Actuator (Wet)	68	31	2538
12	Rudder Actuator (Wet)	68	31	2551
13	Rudder Actuator (Wet)	68	31	2563

[a] This includes the total vertical fin structure less the other structural components listed in this table.

APPLICABLE CONFIGURATIONS
All

BOEING PROPRIETARY
Export Controlled by ECCN 9E991

COMPONENT WEIGHTS AND BALANCE ARMS

BODY COMPONENTS

Some of the removable body components are illustrated in the following figure:

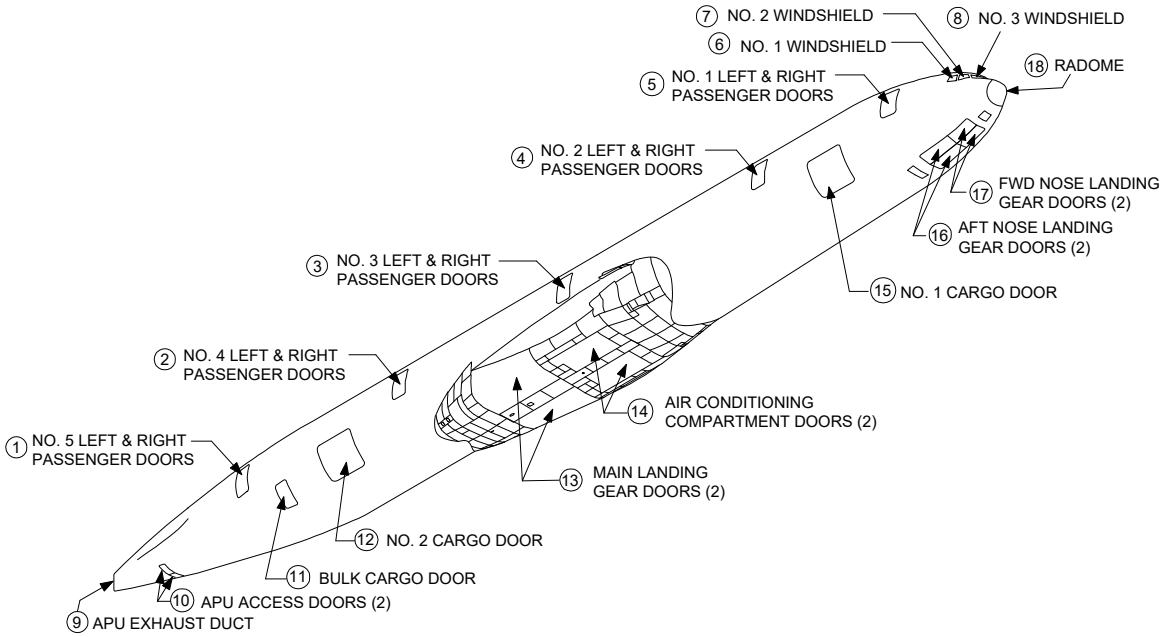

The following table provides nominal weights and balance arms for body components from the above illustration. Values from this table should only be used to determine approximate weight and balance for specialized types of maintenance.

ITEM NO.	BODY COMPONENTS	WEIGHT		B.A. IN.
		LB/EA	KG/EA	
1	No. 5 Passenger Door (Left & Right)	502	228	2229
2	No. 4 Passenger Door (Left & Right)	468	212	1709
3	No. 3 Passenger Door (Left & Right)	394	179	1179
4	No. 2 Passenger Door (Left & Right)	495	225	552
5	No. 1 Passenger Door (Left & Right)	524	238	145
6	No. 1 Windshield (Left & Right)	46	21	-10
7	No. 2 Windshield (Left & Right)	57	26	-35
8	No. 3 Windshield (Left & Right)	93	42	-50
9	APU Exhaust Duct	52	24	2699
10	APU Access Doors (2)	70	32	2648
11	Bulk Cargo Door	99	45	2105
12	No. 2 Cargo Door	819	371	1923
13	Main Landing Gear Doors (2)	645	293	1325

APPLICABLE CONFIGURATIONS
All

BOEING PROPRIETARY
Export Controlled by ECCN 9E991

COMPONENT WEIGHTS AND BALANCE ARMS (Continued)

ITEM NO.	BODY COMPONENTS (Continued)	WEIGHT		B.A. IN.
		LB/EA	KG/EA	
14	Air Conditioning Compartment Doors (2)	118	54	1135
15	No. 1 Cargo Door	819	371	347
16	Aft Nose Landing Gear Doors (2)	35	16	91
17	Fwd Nose Landing Gear Doors (2)	43	20	8
18	Radome	73	33	-94

APPLICABLE CONFIGURATIONS
All

BOEING PROPRIETARY
Export Controlled by ECCN 9E991

COMPONENT WEIGHTS AND BALANCE ARMS

MAIN GEAR COMPONENTS

Some of the removable main gear components are illustrated in the following figure:

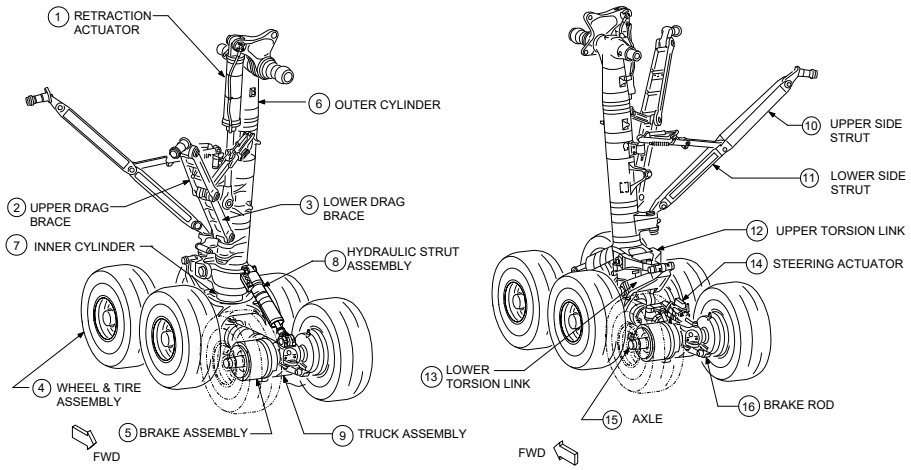

The following table provides nominal weights and balance arms for main gear components from the above illustration. Values from this table should only be used to determine approximate weight and balance for specialized types of maintenance.

ITEM NO.	MAIN GEAR COMPONENTS	WEIGHT		B.A. IN.
		LB/EA	KG/EA	
1	Retraction Actuator	248	113	1316
2	Upper Drag Brace	115	52	1279
3	Lower Drag Brace	107	49	1308
4	Wheel & Tire Assembly (6)	527	239	[a]
5	Brake Assembly (6)	251	114	[a]
6	Outer Cylinder	1928	875	1332
7	Inner Cylinder	1088	494	1342
8	Hydraulic Strut Assembly	279	127	1320
9	Truck Assembly	1885	855	1349
10	Upper Side Strut	114	52	1362
11	Lower Side Strut	105	48	1351
12	Upper Torsion Link	157	72	1359
13	Lower Torsion Link	185	84	1359
14	Steering Actuator	69	31	1383
15	Axle	264	120	[a]
16	Brake Rod	109	49	1343
	Complete Assembly (Trunnion and below)	13040	5915	1340

[a] The balance arm for the wheels, tires, brakes and axles are as follows:
Fwd: 1287, Mid: 1344, Aft: 1402

APPLICABLE CONFIGURATIONS
All

BOEING PROPRIETARY
Export Controlled by ECCN 9E991

COMPONENT WEIGHTS AND BALANCE ARMS

NOSE GEAR COMPONENTS

Some of the removable nose gear components are illustrated in the following figure:

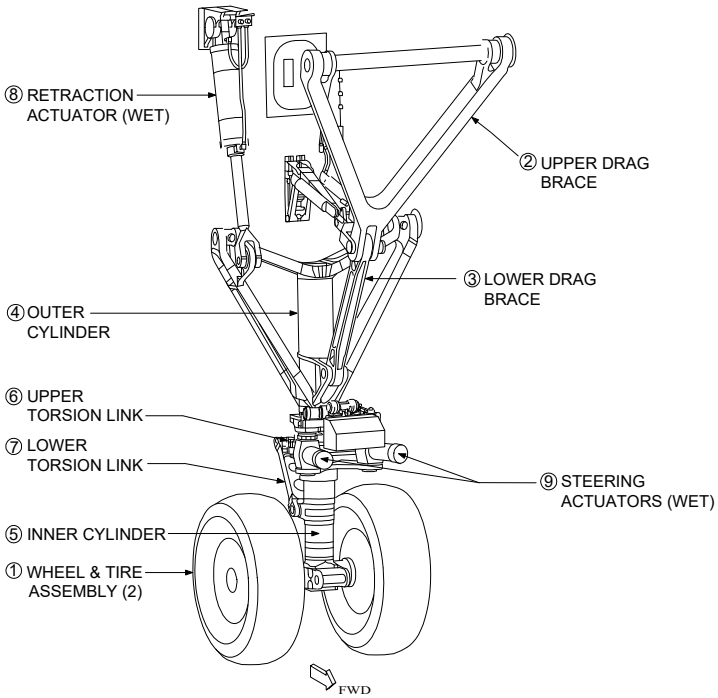

The following table provides nominal weights and balance arms for nose gear components from the above illustration. Values from this table should only be used to determine approximate weight and balance for specialized types of maintenance.

ITEM NO.	NOSE GEAR COMPONENTS	WEIGHT		B.A. IN.
		LB/EA	KG/EA	
1	Wheel & Tire Assembly (2)	276	125	115
2	Upper Drag Brace	224	102	61
3	Lower Drag Brace	76	35	90
4	Outer Cylinder	588	267	110
5	Inner Cylinder	343	156	112
6	Upper Torsion Link	14	6	120
7	Lower Torsion Link	28	13	123
8	Retraction Actuator - Wet	140	64	111
9	Steering Actuators - Wet (2)	50	23	98
	Complete Assembly (Trunnion and below)	2590	1175	111

APPLICABLE CONFIGURATIONS
All

BOEING PROPRIETARY
Export Controlled by ECCN 9E991

COMPONENT WEIGHTS AND BALANCE ARMS

NACELLE AND POWER PLANT COMPONENTS

Some of the removable nacelle and power plant components are illustrated in the following figure:

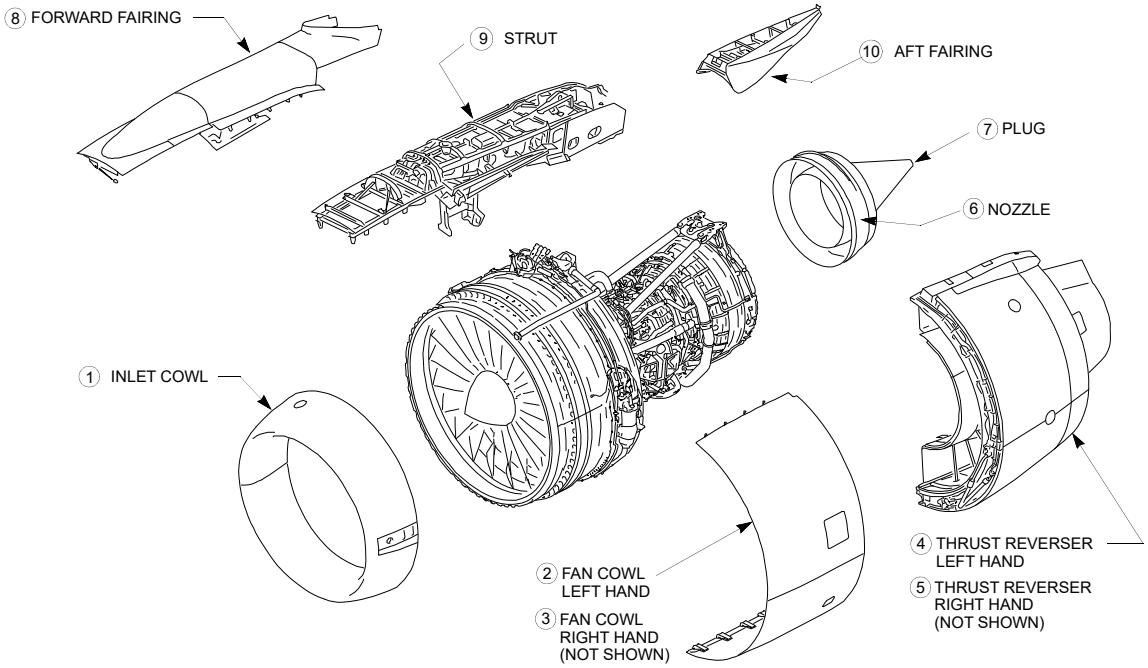

The following table provides nominal weights and balance arms for nacelle and power plant components from the above illustration. Values from this table should only be used to determine approximate weight and balance for specialized types of maintenance.

ITEM NO.	NACELLE AND POWER PLANT COMPONENTS	WEIGHT		B.A. IN.
		LB/EA	KG/EA	
1	Inlet Cowl	998	453	913
2	Fan Cowl - Left Hand	262	119	973
3	Fan Cowl - Right Hand	266	121	973
4	Thrust Reverser - Left Hand	1703	772	1047
5	Thrust Reverser - Right Hand	1620	735	1048
6	Nozzle	86	39	1145
7	Plug	67	30	1162
8	Forward Fairing	85	39	1081
9	Strut and Systems	2875	1304	1095
10	Aft Fairing	395	179	1214
	POWER PLANT PACKAGE **(Includes: Bare Engine, Residual Fluid and Engine Systems)**			
	GE90 Series	19700	8936	1036
	AUXILIARY POWER UNIT (NOT SHOWN) **(Includes: Exhaust Duct and Generator)**	809	367	2643

APPLICABLE CONFIGURATIONS
All

BOEING PROPRIETARY
Export Controlled by ECCN 9E991

LOADING SCHEDULE DEVELOPMENT

INTRODUCTION

Federal Aviation Regulations Part 121 states that the airplane shall be operated in accordance with a loading schedule which ensures that the airplane gross weight and center of gravity limitations are not exceeded.

A loading schedule is generally comprised of two parts: the substantiation of the loading schedule development, and a manifest / load sheet which is the form used to manifest the aircraft and check the balance condition of an aircraft prior to its flight. The manifest is generally a tabular form used to document the aircraft load. The load sheet includes operational center of gravity limits along with a method to calculate the balance effect of loaded items. Operational center of gravity limits are derived by applying curtailments to the certified center of gravity limits to ensure that all loading situations will fall within the certified center of gravity limits.

Example Loading Schedule

The example loading schedule document describes the method of developing a loading schedule using a generic airplane configuration. This document's function is to provide an example of loading schedule development and substantiation. It contains the following:

- An example loading problem to assist in understanding airplane loading procedures
- Equations used to develop a loading schedule
- Passenger cabin zones and cargo compartment definitions
- Cargo load limits
- Incremental load item index development methodology
- Horizontal stabilizer trim settings
- Development and application of curtailments to the structural center of gravity limits
- Sample manifest / load sheet construction using the data developed in the document

This document is available on MyBoeingFleet at https://flightops.web.boeing.com/flightops/Home.aspx.

Customized Loading Schedule

A customized loading schedule is completely tailored to the specific customer requirements. In certain cases, multiple aircraft configurations may be substantiated within one document, along with one or more manifest / loadsheets. Other features which can be customized include, but are not limited to, the following:

- Customer specified passenger and baggage weight allowances
- Customer specified manifest / load sheet format and content
- Revisions may be purchased (requires a Technical Assistance Contract)

The amount of customizing generally requires a significant amount of coordination between a knowledgeable airline representative and the loading schedule developer. A customized loading schedule may be purchased using a Technical Assistance Contract and can be ordered through the Data and Services (D&S) catalog. Otherwise, please direct Loading Schedule order requests to Account/Sales Director or Customer Engineer.

APPLICABLE CONFIGURATIONS
All

BOEING PROPRIETARY
Export Controlled by ECCN 9E991